Page nomber	List of design project drawings	Page nomber	List of design project drawings	Page nomber	List of design project drawings
DP-1	Measurement scheme	DP-14	Wall scheme: Hall1 (room №1)	DP-29	Wall scheme: Dressing rooma 4 (room №23)
DP-2	Demounting scheme	DP-14.1	Wall scheme: Hall1 (room №1)	DP-30	Wall scheme: boy's bedroom (room №21)
DP-3	Mounting scheme	DP-15	Wall scheme: Living room (room №3)	DP-31	Wall scheme: bathroom5 (room №14)
DP-4	Redevelopment scheme	DP-15.1	Wall scheme: Living room (room №3)	DP-32	Wall scheme: Game-room (room №10)
DP-5	Furniture layout scheme	DP-16	Wall scheme: kitchen (room №4)	DP-32.1	Wall scheme: game-room (room №10)
DP-6	Sockets and outlets layout scheme	DP-16.1	Wall scheme: kitchen (room №4)	DP-33	Wall scheme: girl's bedroom (room №18)
DP-7	Ceiling design scheme	DP-17	Wall scheme: Hall2 (room №5)	DP-34	Wall scheme: water closet 3 (room №19)
DP-7	Ceiling design scheme (Fragment1)	DP-17.1	Wall scheme: Hall2 (room №5)	DP-35	Wall scheme: Cinema-room (room №12)
DP-7	Ceiling design scheme (Fragment2)	DP-17.2	Wall scheme: Hall2 (room №5)	DP-36	Wall scheme: bathroom 3 (room №22)
DP-7	Ceiling design scheme (Fragment3)	DP-17.3	Wall scheme: Hall2 (room №5)	DP-37	Wall scheme: Cabinet (room №24)
DP-7.1	Ceiling section scheme	DP-18	Wall scheme: Rest-room (room №6)	DP-37.1	Wall scheme: Cabinet (room №24)
DP-7.2	Ceiling section scheme	DP-18.1	Wall scheme: Rest-room (room №6)	DP-38	Wall scheme: bedroom (room №25)
DP-7.3	Ceiling section scheme	DP-19	Wall scheme: Guest bedroom (room №7)	DP-38.1	Wall scheme: bedroom (room №25)
DP-7.4	Ceiling section scheme	DP-19.1	Wall scheme: Guest bedroom (room №7)	DP-39	Wall scheme: bathroom 4 (room №26)
DP-7.5	Ceiling section scheme	DP-20	Wall scheme: Bathroom1 (room №9)	DP-39.1	Wall scheme: bathroom 4 (room №26)
DP-7.6	Ceiling section scheme	DP-21	Wall scheme: Dressing room1 (room №2)	DP-40	Wall scheme: water closet (room №29)
DP-8	Lightning design scheme	DP-22	Wall scheme: water closet 1 (room №11)	DP-41	Wall scheme: shower-room (room №30)
DP-9	Switches scheme	DP-22.1	Wall scheme: water closet 1 (room №11)	DP-42	Wall scheme: sauna (room №27)
DP-9.1	Switches scheme (part 2)	DP-23	Wall scheme: guest-room 2 (room №13)	DP-43	Wall scheme: hammam (room №28)
DP-10	Heat-insulated floor scheme	DP-24	Wall scheme: bathroom2 (room №16)	DP-44	Ceiling gypsum decor specification
DP-11	Flooring scheme	DP-25	Wall scheme: Dressing room2 (room №8)	DP-45	Wall gypsum decor specification
DP-11.1	Flooring specification	DP-26	Wall scheme: Dressing room (room №15)	DP-46	Furniture specification
DP-12	Sanitary equipment and kitchen equipment scheme	DP-27	Wall scheme: Dressing room3 (room №20)	DP-47	Lightning specification
DP-13	Door scheme	DP-28	Wall scheme: Hall 3 (room №17)	DP-47.1	Lightning specification
DP-13.1	Wall denomination scheme			DP-48	Electrical equipment specification

Project Designers: Maks Bosetskyi, Katrina Antonovich

DP - 0
Genral information

LUXURY ANTONOVICH DESIGN

Page **DP-0**

General information

Design Project

Abu Dhabi

ROYAL STYLE COMPUTER GRAPHIC DESIGN SERV
+971 45 513 144
2301 office, 23 fl, Tower 1
Boulevard Plaza, Dubai
www.antonovich-design.ae

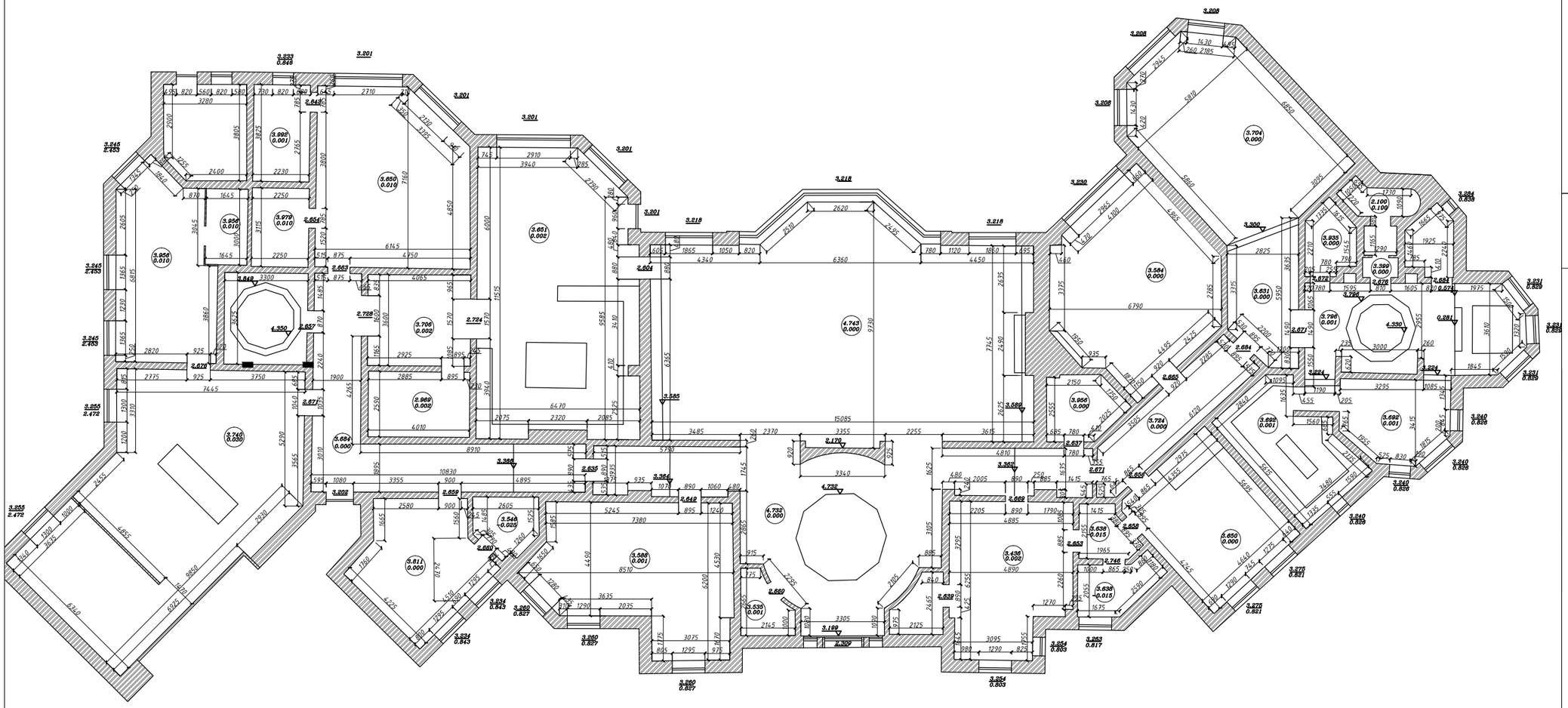

Conventional signs:

3.101 / 0.001 - ceiling mark; Floor mark;

2.751 / 0.701 - Doorway top mark; Doorway bottom mark;

1.111 - отметки конструкции;

DP - 1
Measurement scheme

LUXURY ANTONOVICH DESIGN

Page DP-1

Measurement scheme

Design Project

Abu Dhabi

ROYAL STYLE COMPUTER GRAPHIC DESIGN SERV
+971 45 513 144
2301 office, 23 fl, Tower 1
Boulevard Plaza, Dubai
www.antonovich-design.ae

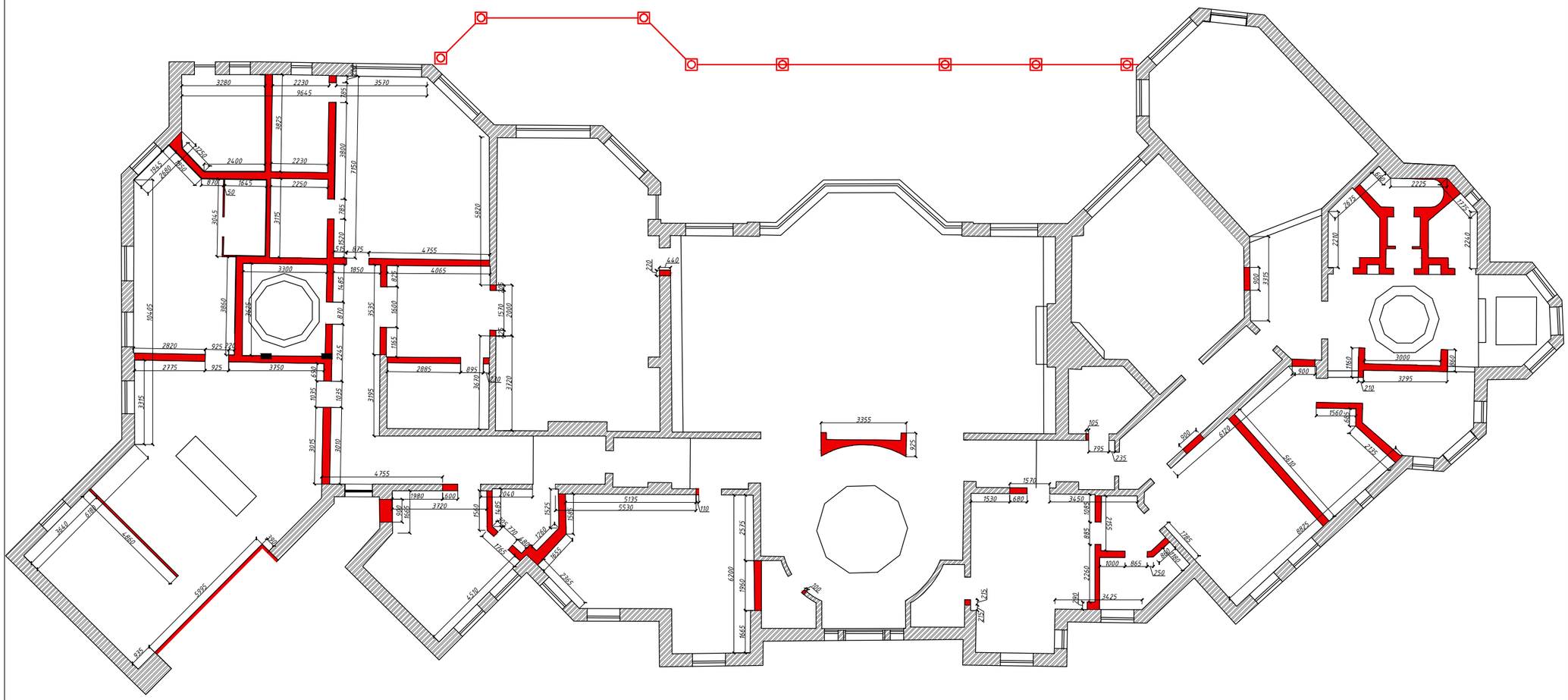

DP - 2
Demounting scheme

LUXURY ANTONOVICH DESIGN

Page DP-2

Demounting scheme

Design Project Abu Dhabi

ROYAL STYLE COMPUTER GRAPHIC DESIGN SERV
+971 45 513 144
2301 office, 23 fl, Tower 1
Boulevard Plaza, Dubai
www.antonovich-design.ae

Conventional signs:

wall demounting

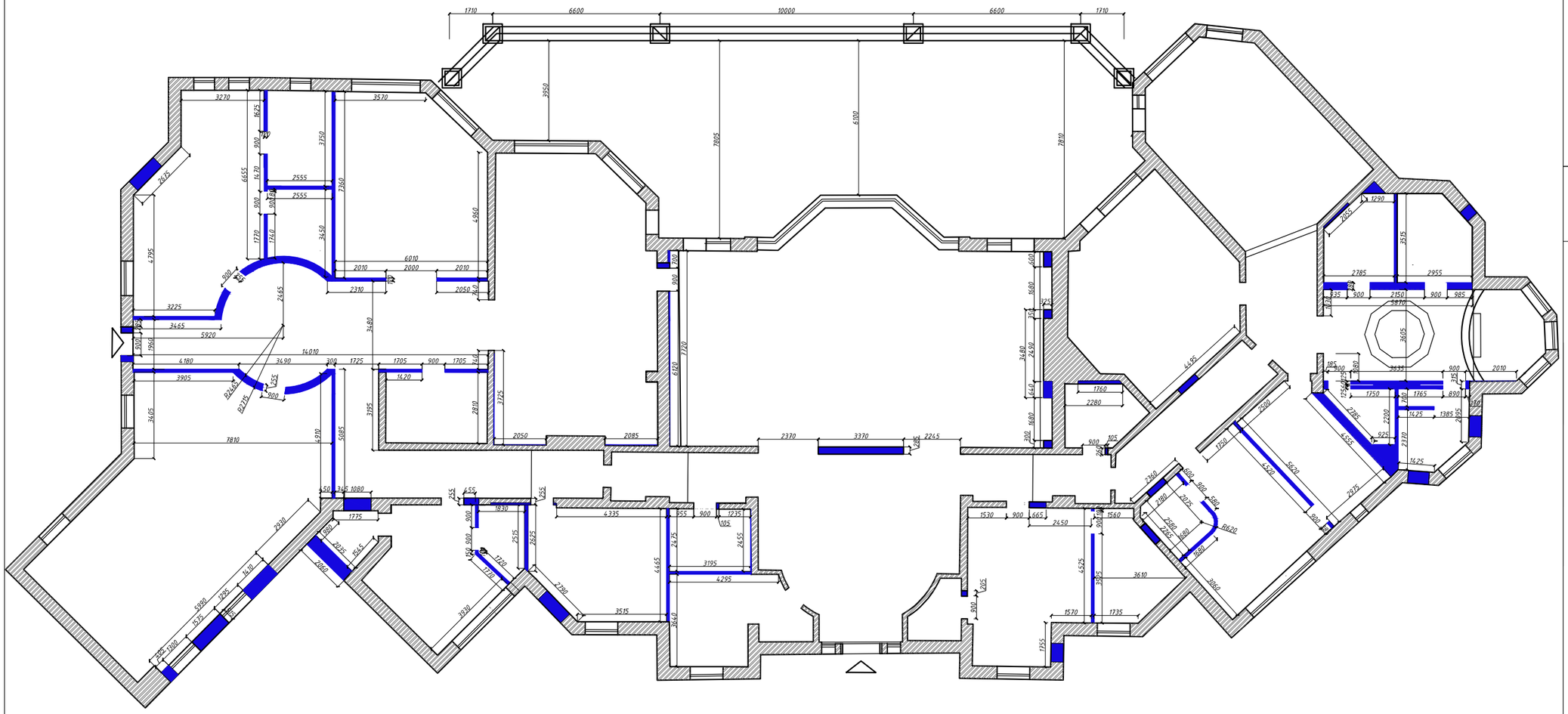

DP - 3
Mounting scheme

LUXURY ANTONOVICH DESIGN

Page DP-3

Mounting scheme

ROYAL STYLE COMPUTER GRAPHIC DESIGN SERV
+971 45 513 144
2301 office, 23 fl, Tower 1
Boulevard Plaza, Dubai
www.antonovich-design.ae

Design Project

Abu Dhabi

Conventional signs:

mounting walls

Примечания:

1. Material of walls is brick
2. Wall thickness 120 mm. without stucco

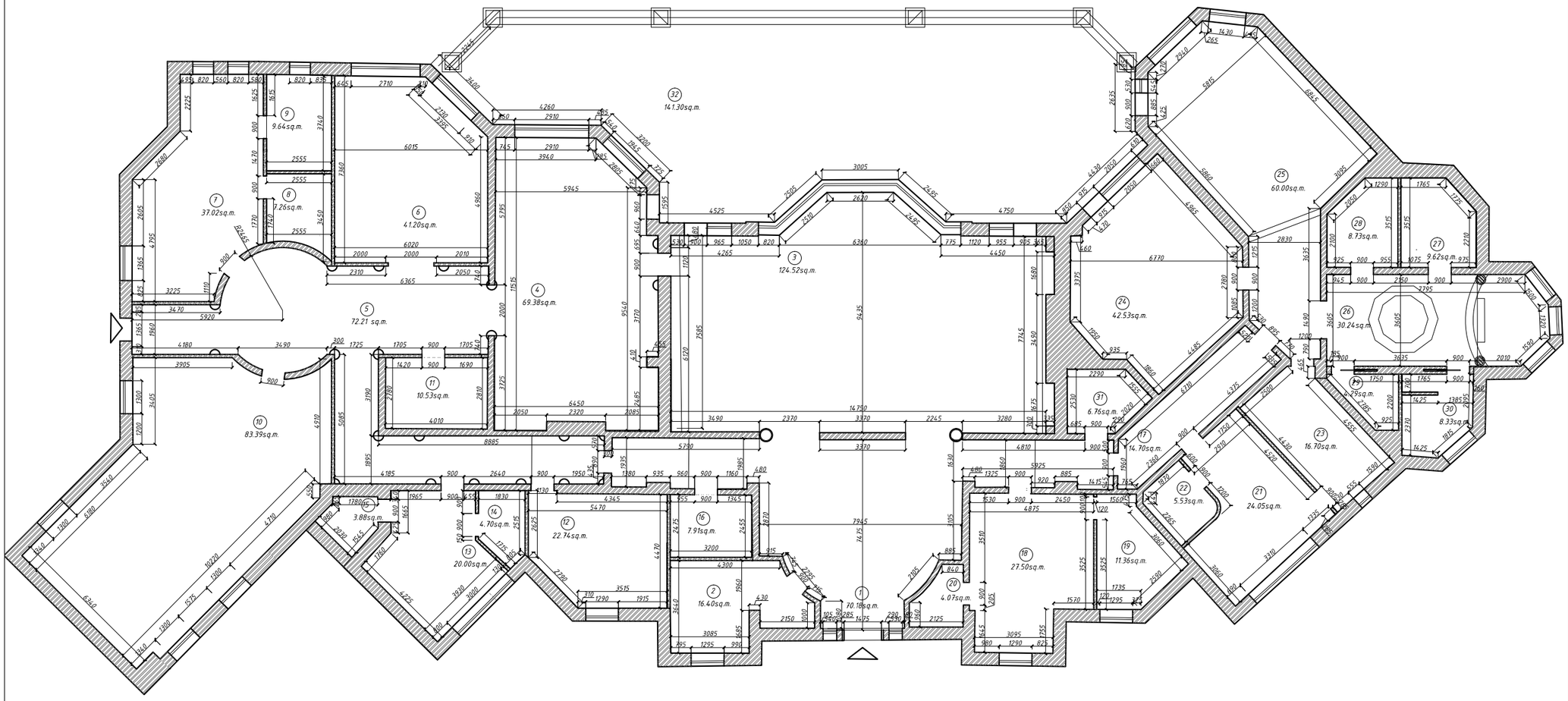

DP - 4
Redevelopment scheme

LUXURY ANTONOVICH DESIGN

Redevelopment scheme

Page DP-4

ROYAL STYLE COMPUTER GRAPHIC DESIGN SERV
+971 45 513 144
2301 office, 23 fl, Tower 1
Boulevard Plaza, Dubai
www.antonovich-design.ae

Design Project Abu Dhabi

Legend

N	Name	S sq.m.
1	Hall 1	70,18
2	Dressing room1	16,40
3	Living room	124,52
4	Kitchen	69,38
5	Hall 2	72,21
6	Rest-room	41,20
7	Guest bedroom 1	37,02
8	Dressing room 2	7,26
9	Bathroom 1	9,64
10	Game-room	83,39
11	Water closet 1	10,53
12	Cinema-room	22,74
13	Guest bedroom 2	20.00
14	Bathroom 5	4.70
15	Dressing room	3.88
16	Bathroom 2	7.91
17	Hall 3	14.70
18	Girl's bedroom	27.50
19	Water closet 3	11.36
20	Dressing room 3	4.07
21	Boy's bedroom	24.05
22	Bathroom 3	5.53
23	Dressing room 4	16.70
24	Cabinet	42.53
25	Bedroom	60.00
26	Bathroom 4	30.24
27	Sauna	9.62
28	Hammam	8.73
29	Water closet	4.29
30	Shower room	8.33
31	Water closet	6.76
	Total area	875.37
33	Terrace	141.30

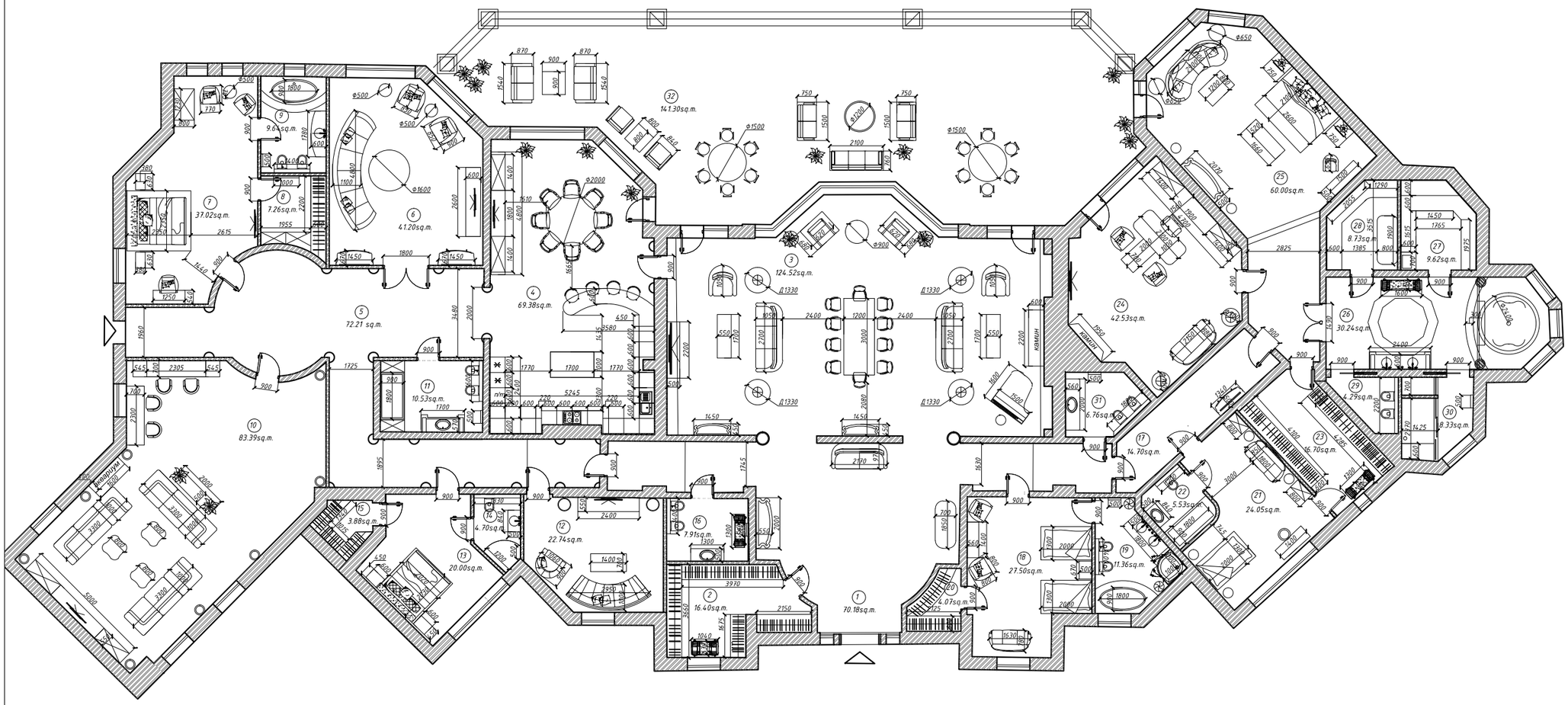

DP - 5
Furniture layout scheme

LUXURY ANTONOVICH DESIGN

Page DP-5

Furniture layout scheme

ROYAL STYLE COMPUTER GRAPHIC DESIGN SERV
+971 45 513 144
2301 office, 23 fl, Tower 1
Boulevard Plaza, Dubai
www.antonovich-design.ae

Design Project — Abu Dhabi

Legend

N	Name	S sq.m.
1	Hall 1	70,18
2	Dressing room1	16,40
3	Living room	124,52
4	Kitchen	69,38
5	Hall 2	72,21
6	Rest-room	41,20
7	Guest bedroom 1	37,02
8	Dressing room 2	7,26
9	Bathroom 1	9,64
10	Game-room	83,39
11	Water closet 1	10,53
12	Cinema-room	22,74
13	Guest bedroom 2	20.00
14	Bathroom 5	4.70
15	Dressing room	3.88
16	Bathroom 2	7.91
17	Hall 3	14.70
18	Girl's bedroom	27.50
19	Water closet 3	11.36
20	Dressing room 3	4.07
21	Boy's bedroom	24.05
22	Bathroom 3	5.53
23	Dressing room 4	16.70
24	Cabinet	42.53
25	Bedroom	60.00
26	Bathroom 4	30.24
27	Sauna	9.62
28	Hammam	8.73
29	Water closet	4.29
30	Shower room	8.33
31	Water closet	6.76
	Total area	875.37
33	Terrace	141.30

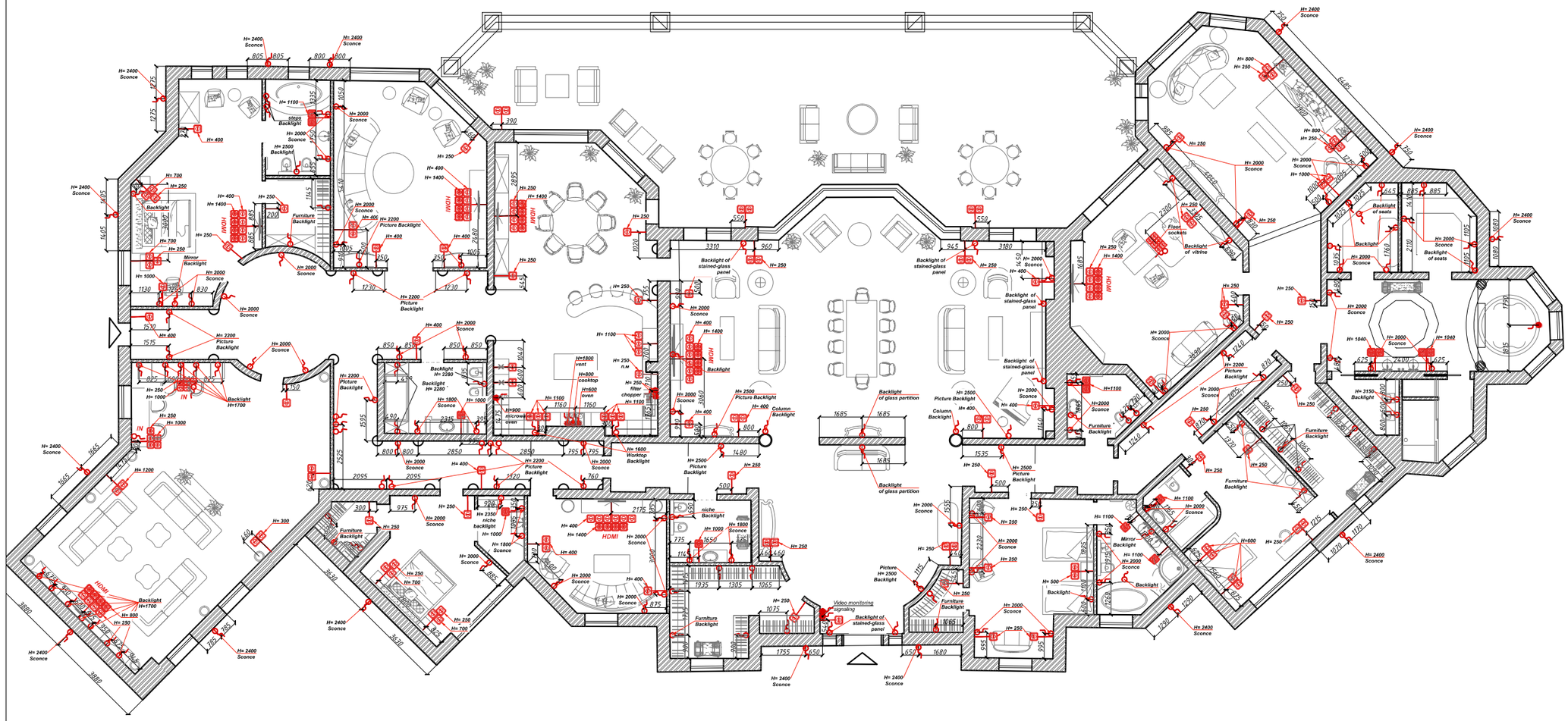

DP - 6
Sockets and outlets layout scheme

LUXURY ANTONOVICH DESIGN

Page DP-6

Sockets and outlets layout scheme

ROYAL STYLE COMPUTER GRAPHIC DESIGN SERV
+971 45 513 144
2301 office, 23 fl, Tower 1
Boulevard Plaza, Dubai
www.antonovich-design.ae

Design Project Abu Dhabi

Conventional signs:

	Socket 220 V, manufactor - GIRA
	Moistureproof socket220 V
AN	Socket for antenna
SP	Socket for satellite TV
TV	TV Socket
	lightning outlet
IN	internet outlet
	electric outlet
	intercom

Note:

1.consider the height of the electrical output for Kitchen equipment according to technical card (after order).
2. Space between center of socket and doorway 200 мм. All sockets are located 300 мм higher from finished floor elevation (except those marked editionally)
5. Outputs for heated towel rail hight clerify after order.
4. Provide for lightning outputs according to lightning design scheme.
5. Use waterproof sockets in areas with high moisture
6. Dimantioning indicated to the center of installation box.
7. mounting dimensions look additionally on wall schemes.

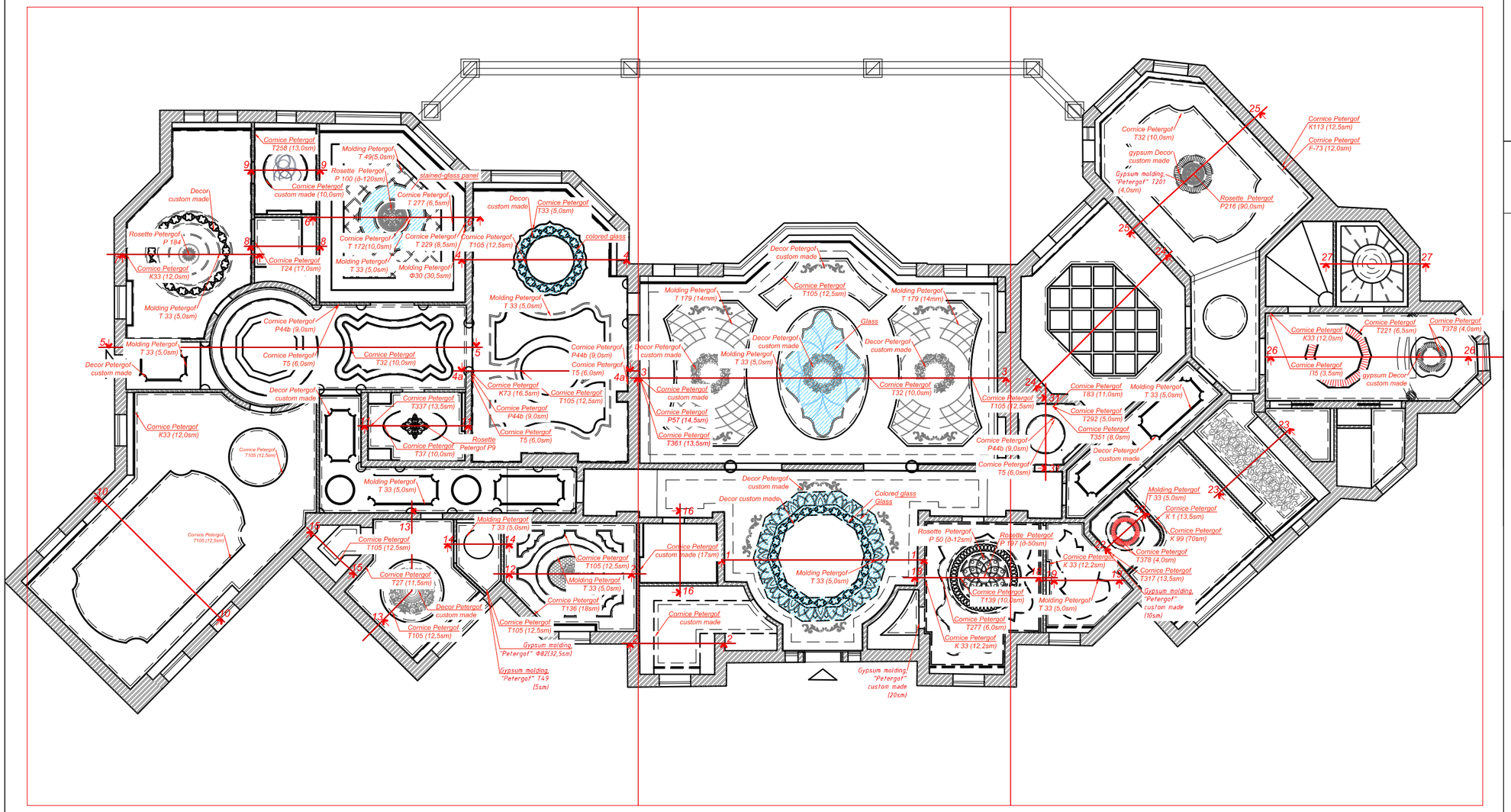

DP - 7
Ceiling design scheme

Note:

1. All dimentions clerify locally
2. Strengthen ceiling for gypsum decorative elements
4. Look together with DP-7.1, DP-7.2, DP-7.3, DP-7.4.
5.Wall and ceiling painting "Oikos" MULTIFUND, Supercolor

LUXURY ANTONOVICH DESIGN

Page **DP-7**

Ceiling design scheme

Design Project

Abu Dhabi

ROYAL STYLE COMPUTER GRAPHIC DESIGN SERV
+971 45 513 144
2301 office, 23 fl, Tower 1
Boulevard Plaza, Dubai
www.antonovich-design.ae

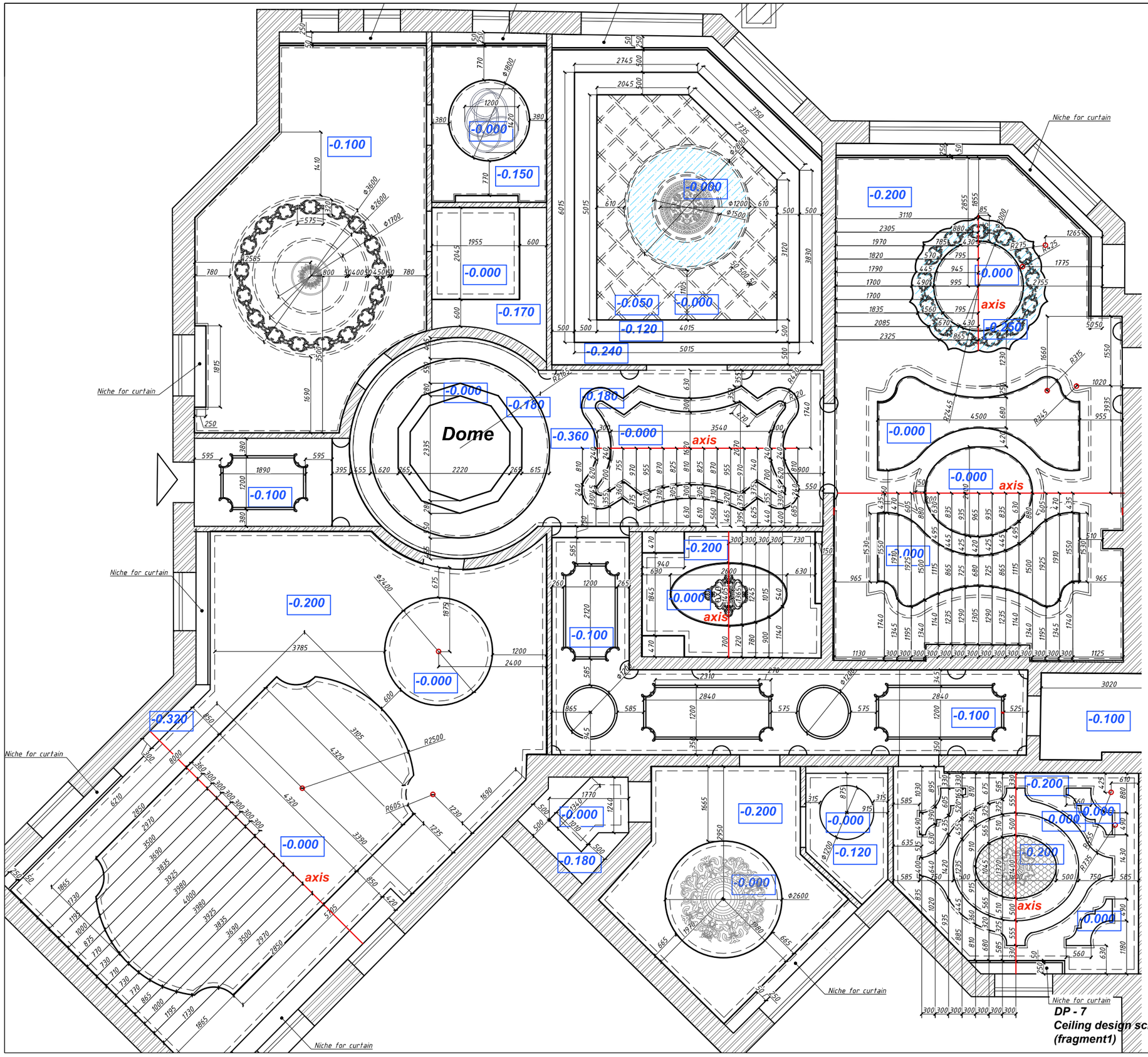

DP - 7
Ceiling design scheme (fragment1)

LUXURY ANTONOVICH DESIGN

Page **DP-7**

Ceiling design scheme (fragment 1)

Design Project: Abu Dhabi

ROYAL STYLE COMPUTER GRAPHIC DESIGN SERV
+971 45 513 144
2301 office, 23 fl, Tower 1
Boulevard Plaza, Dubai
www.antonovich-design.ae

Note:

1. All dimentions clerify locally
2. Strengthen ceiling for gypsum decorative elements
4. Look together with DP-7.1, DP-7.2, DP-7.3, DP-7.4.
5.Wall and ceiling painting "Oikos" MULTIFUND, Supercolor

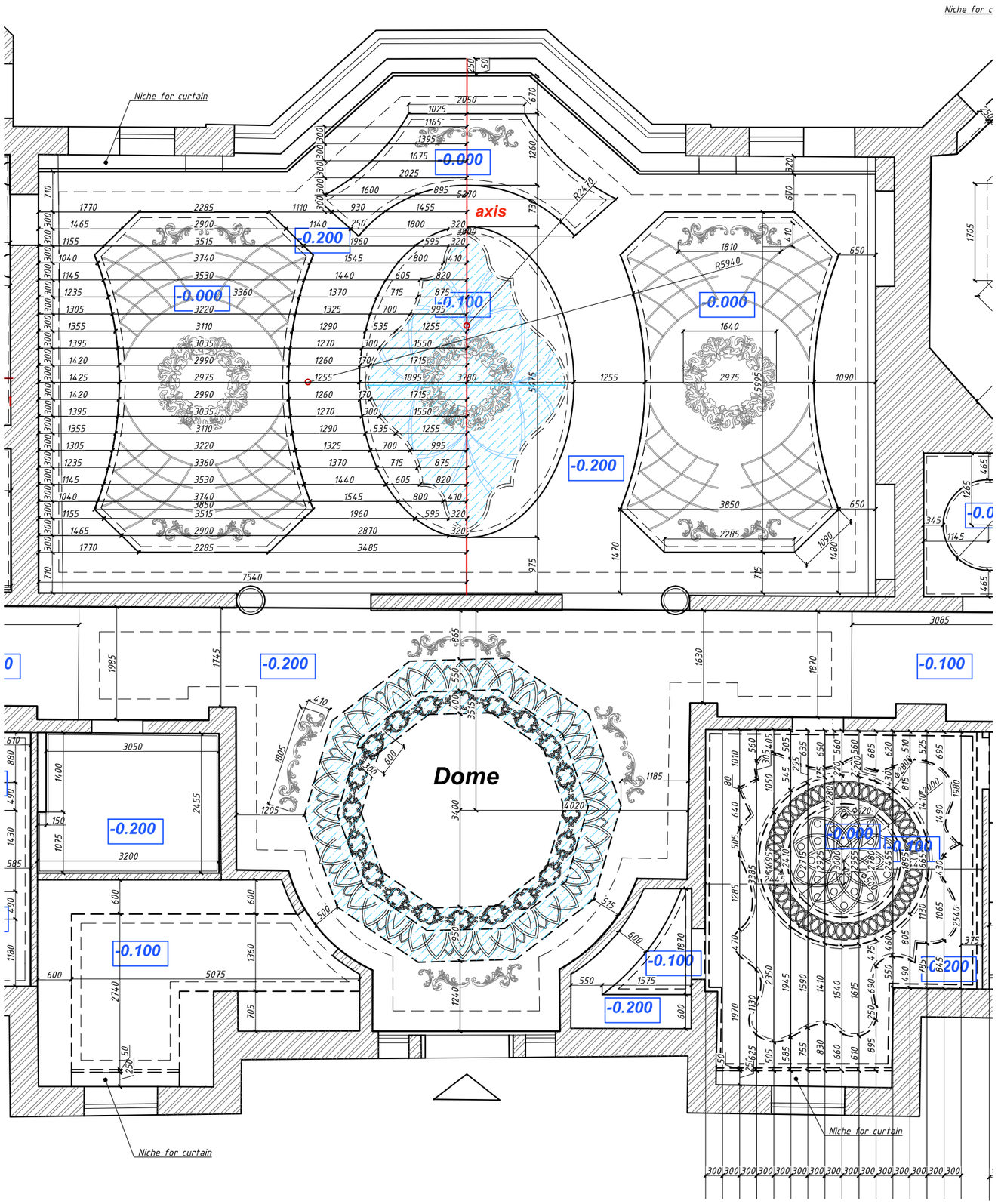

DP - 7
Ceiling design scheme
(fragment2)

Note:

1. All dimentions clerify locally
2. Strengthen ceiling for gypsum decorative elements
4. Look together with DP-7.1, DP-7.2, DP-7.3, DP-7.4.
5.Wall and ceiling painting "Oikos" MULTIFUND, Supercolor

LUXURY ANTONOVICH DESIGN

Page **DP-7**

Ceiling design scheme (fragment2)

Design Project

Abu Dhabi

ROYAL STYLE COMPUTER GRAPHIC DESIGN SERV
+971 45 513 144
2301 office, 23 fl, Tower 1
Boulevard Plaza, Dubai
www.antonovich-design.ae

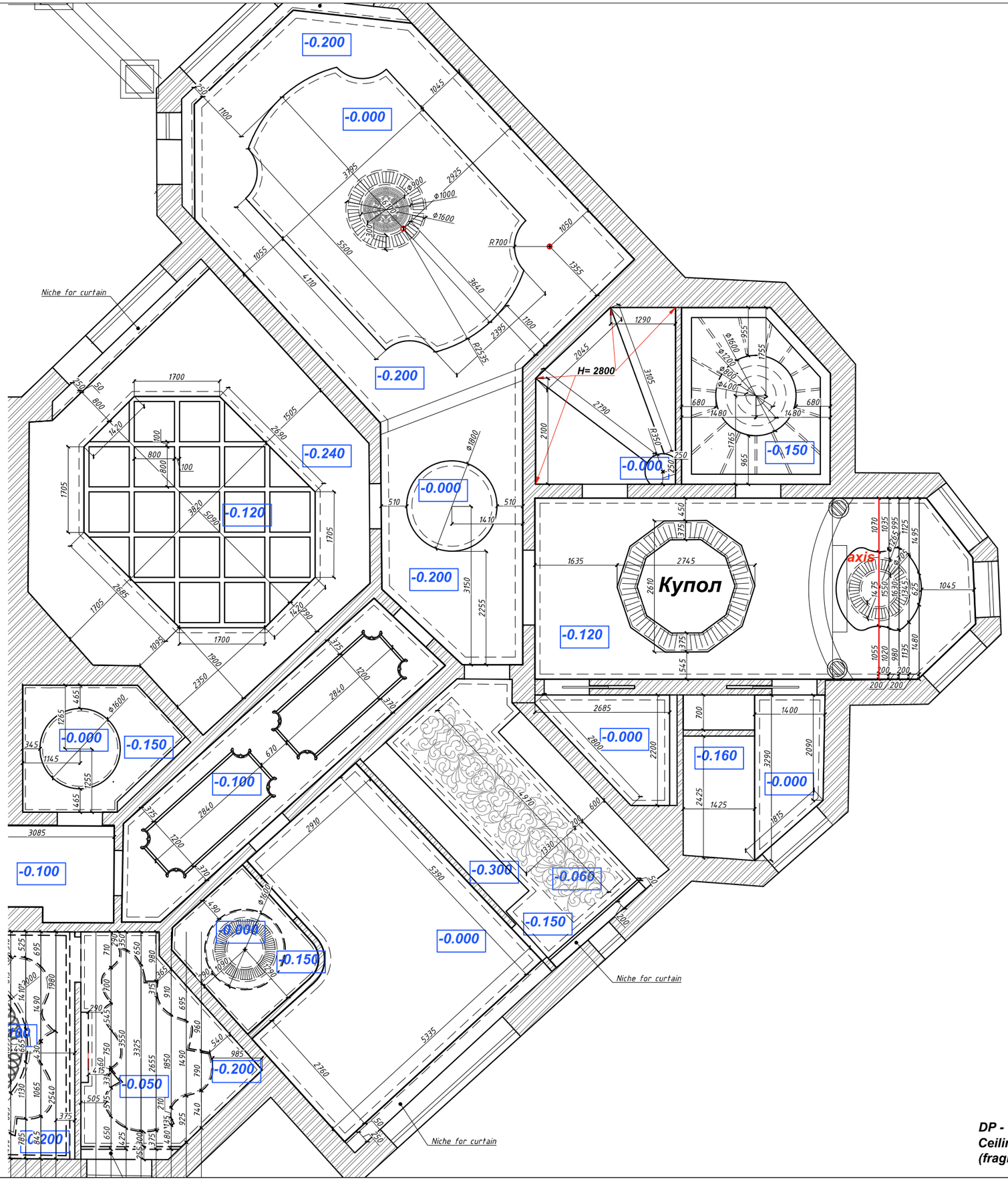

DP - 7
Ceiling design scheme
(fragment3)

Note:

1. All dimentions clerify locally
2. Strengthen ceiling for gypsum decorative elements
4. Look together with DP-7.1, DP-7.2, DP-7.3, DP-7.4.
5.Wall and ceiling painting "Oikos" MULTIFUND, Supercolo

LUXURY ANTONOVICH DESIGN

Page **DP-7**

Ceiling design scheme (fragment3)

Design Project

Abu Dhabi

ROYAL STYLE COMPUTER GRAPHIC DESIGN SERV
+971 45 513 144
2301 office, 23 fl, Tower 1
Boulevard Plaza, Dubai
www.antonovich-design.ae

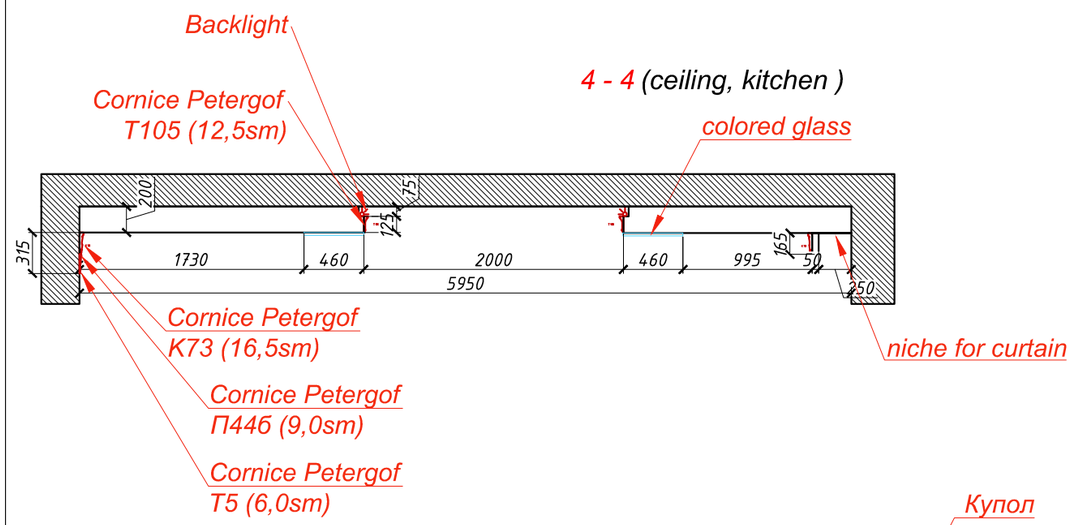

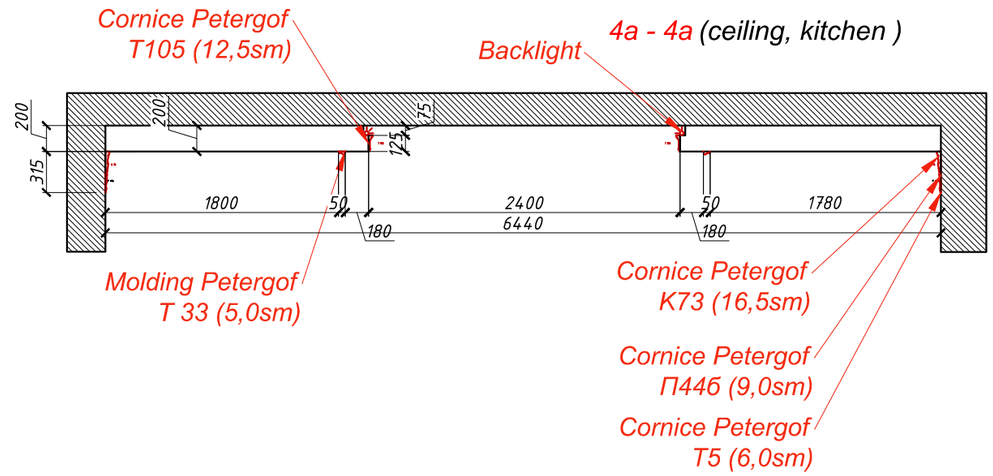

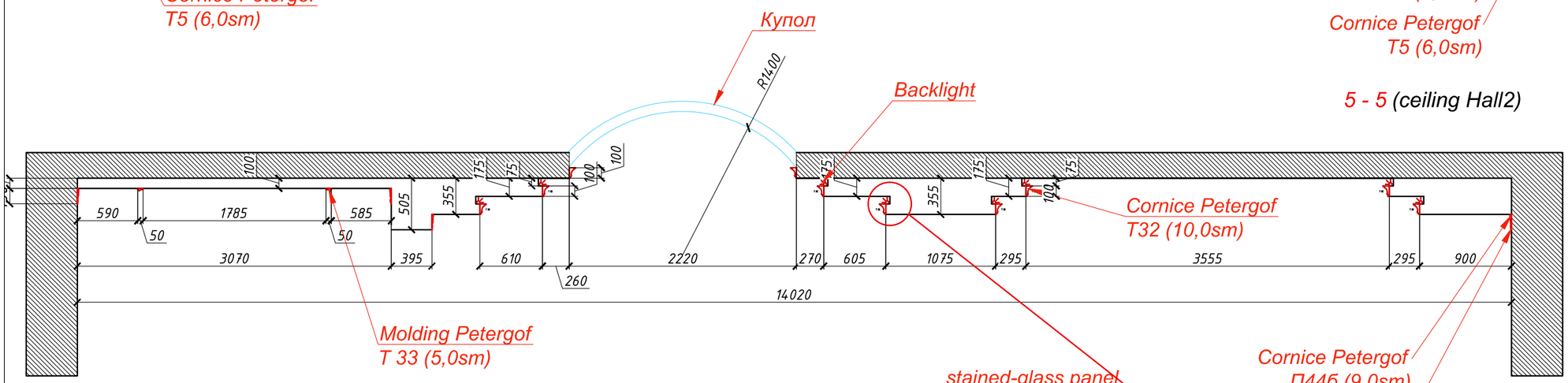

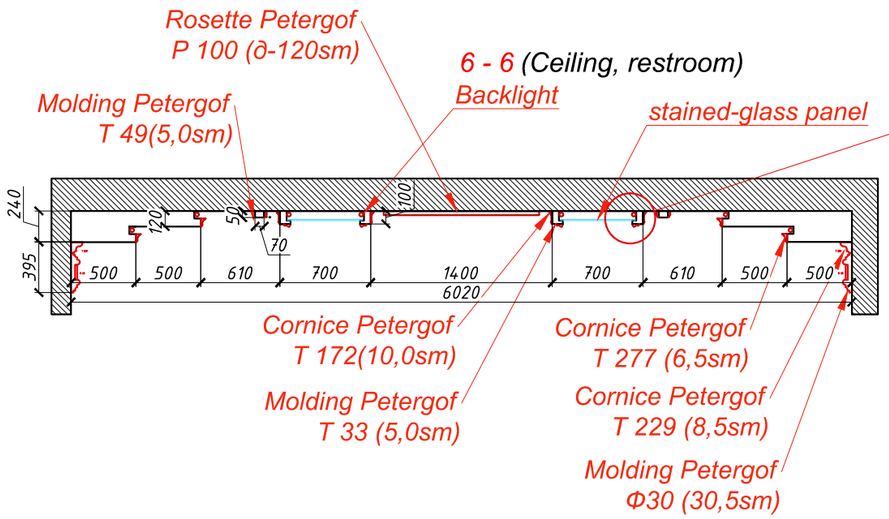

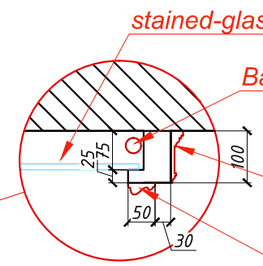

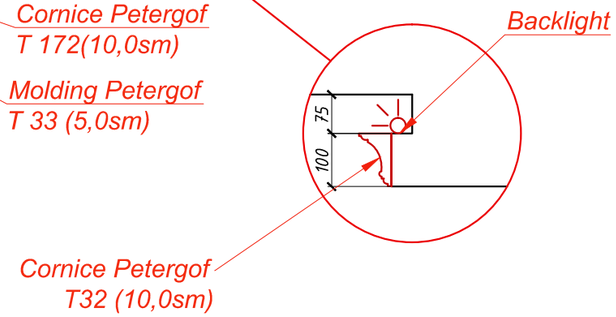

DP - 7.1
Ceiling section scheme

Note:

1. All dimentions clerify locally
2. Strengthen ceiling for gypsum decorative elements
3. Look together with DP-7

LUXURY ANTONOVICH DESIGN

Ceiling section scheme

Page DP-7.1

Design Project

Abu Dhabi

ROYAL STYLE COMPUTER GRAPHIC DESIGN SERV
+971 45 513 144
2301 office, 23 fl, Tower 1
Boulevard Plaza, Dubai
www.antonovich-design.ae

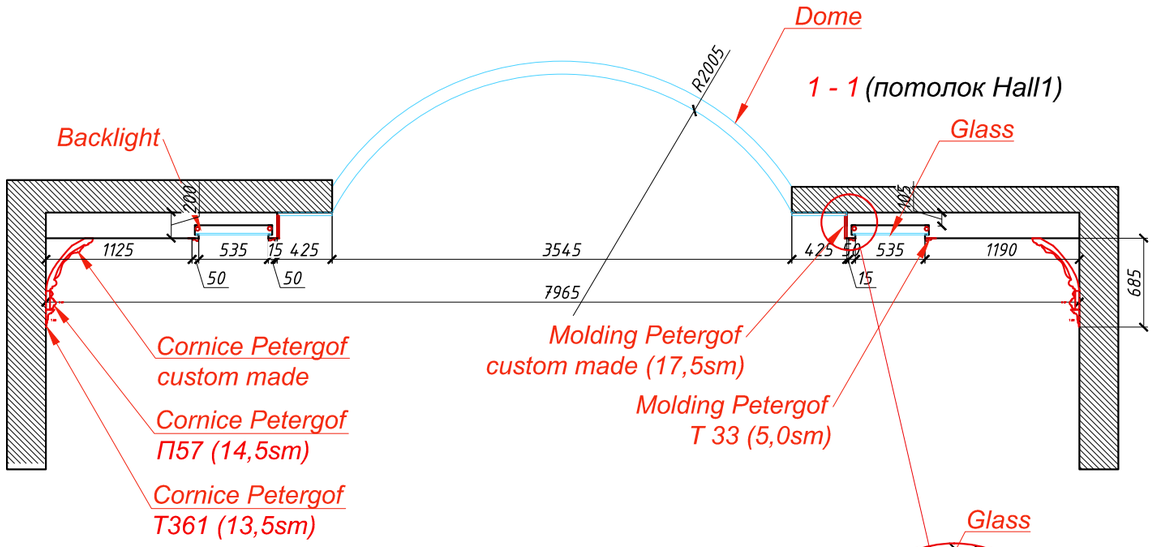

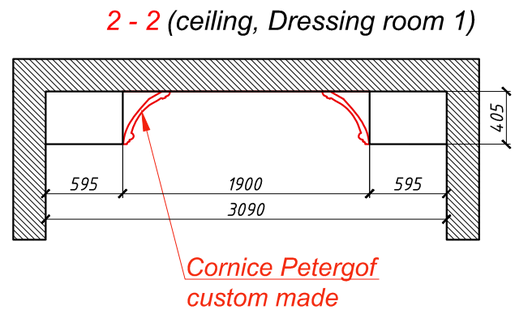

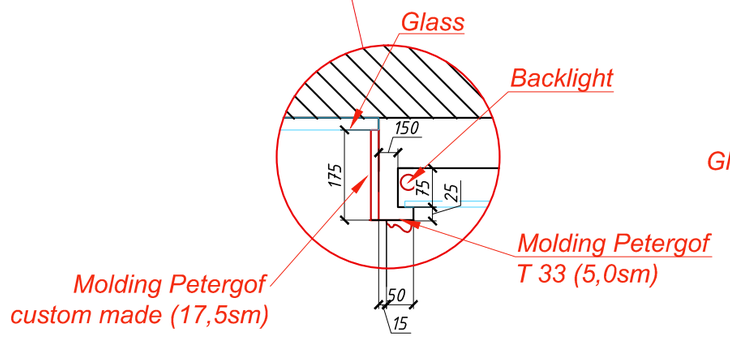

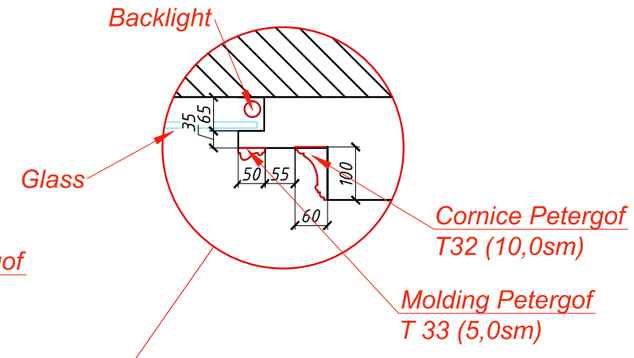

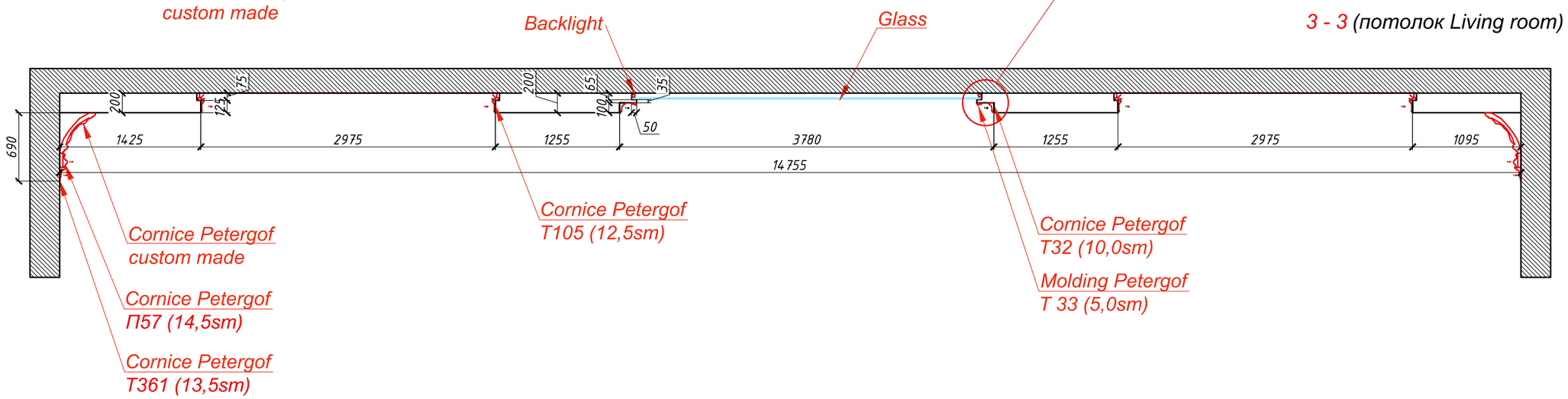

DP - 7.2
Ceiling section scheme

Note:

1. All dimentions clerify locally
2. Strengthen ceiling for gypsum decorative elements
3. Look together with DP-7

LUXURY ANTONOVICH DESIGN

Page **DP-7.2**

Ceiling section scheme

Design Project

Abu Dhabi

ROYAL STYLE COMPUTER GRAPHIC DESIGN SERV
+971 45 513 144
2301 office, 23 fl, Tower 1
Boulevard Plaza, Dubai
www.antonovich-design.ae

7 - 7 (Ceiling, Guest room 1)

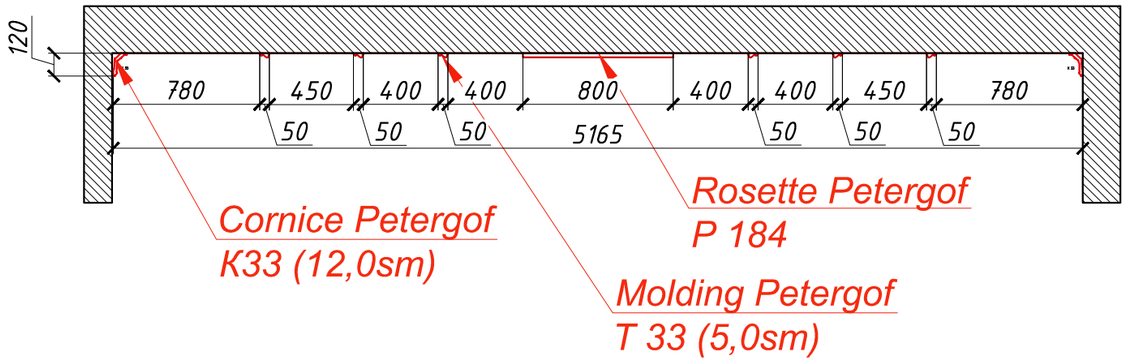

8 - 8 (Ceiling, Dressing room2)

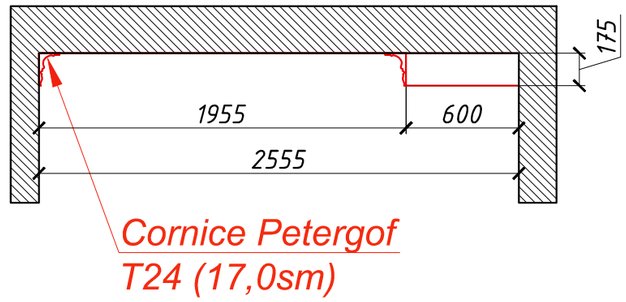

9 - 9 (Ceiling, bathroom1)

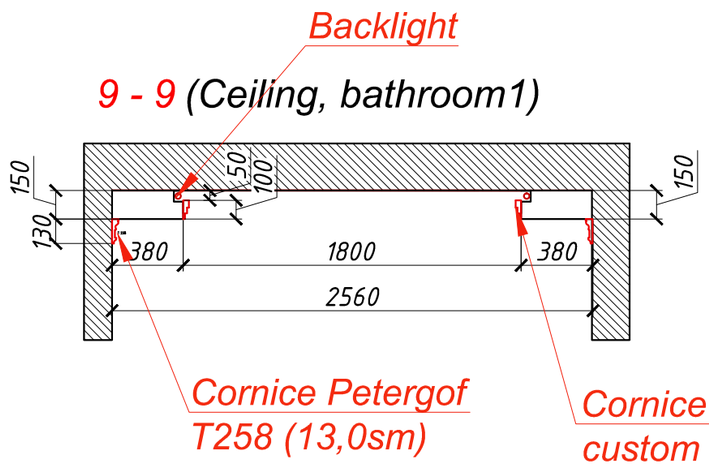

11 - 11 (Ceiling, water closet1)

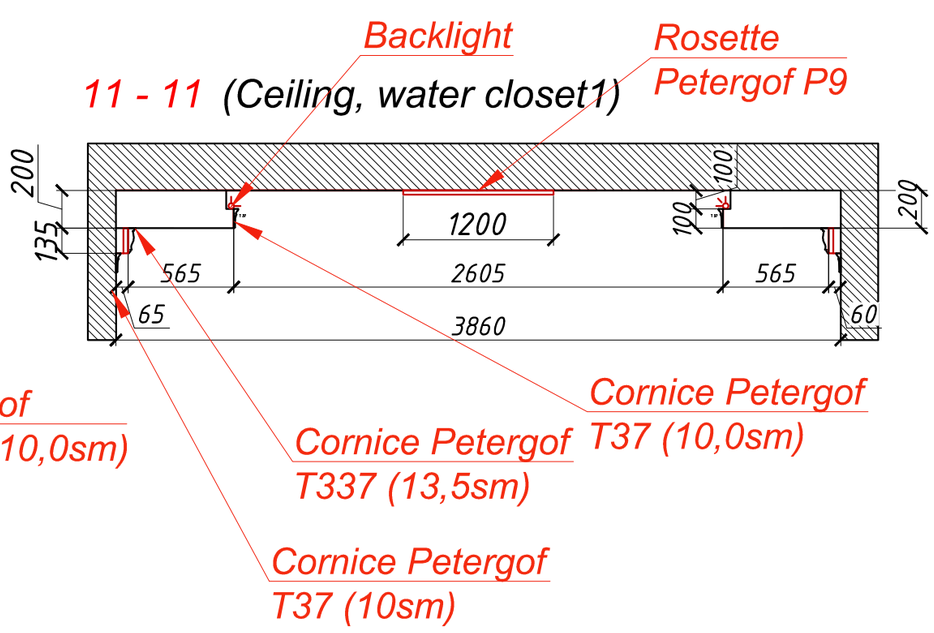

10 - 10 (Ceiling, Game-room)

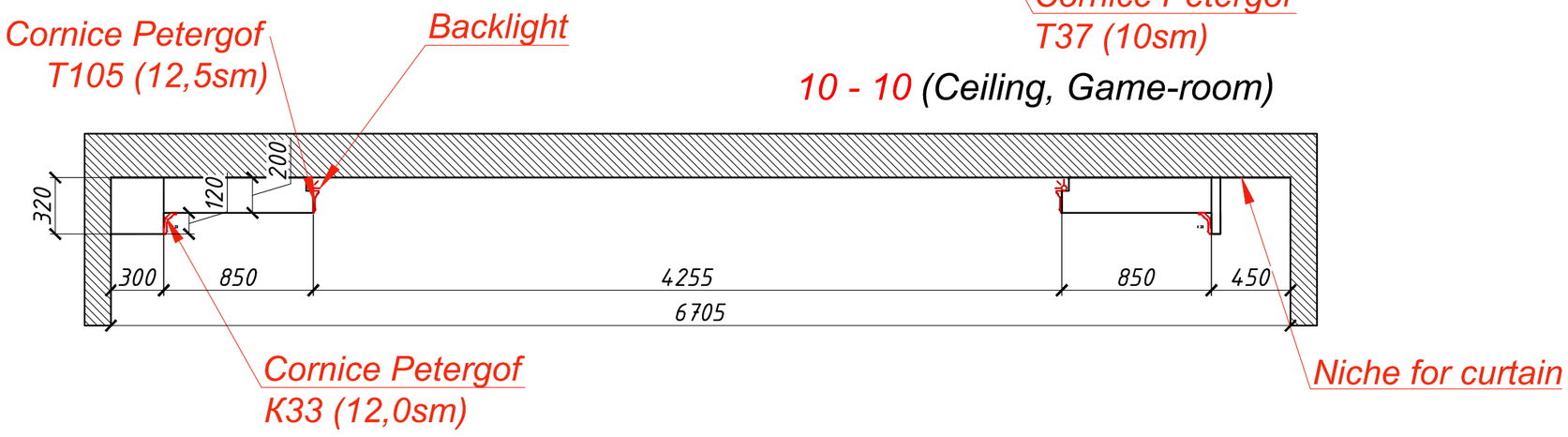

DP - 7.3
Ceiling section scheme

Note:

1. All dimentions clerify locally
2. Strengthen ceiling for gypsum decorative elements
3. Look together with DP-7

LUXURY ANTONOVICH DESIGN

Ceiling section scheme

Page DP-7.3

Design Project

Abu Dhabi

ROYAL STYLE COMPUTER GRAPHIC DESIGN SERV
+971 45 513 144
2301 office, 23 fl, Tower 1
Boulevard Plaza, Dubai
www.antonovich-design.ae

12 - 12 (Ceiling, Cinema-room)

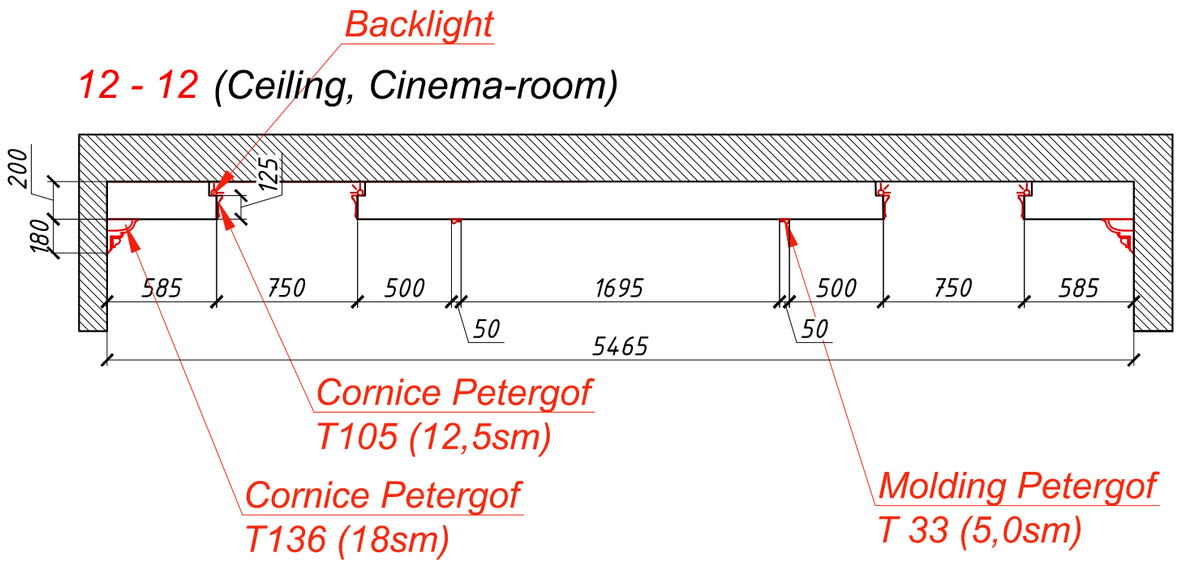

13 - 13 (Ceiling, guest bedroom 2)

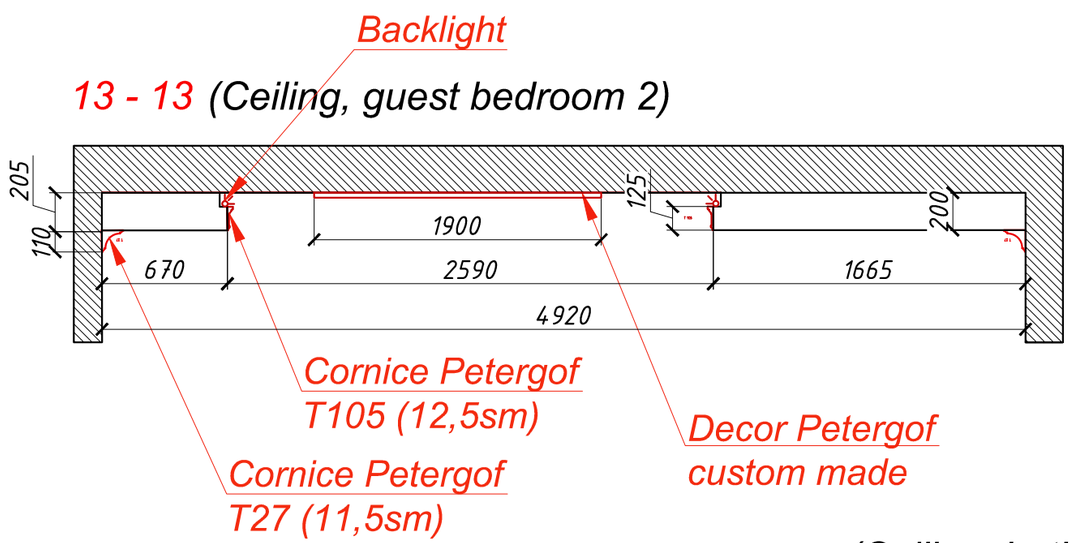

14 - 14 (Ceiling, Bathroom 5)

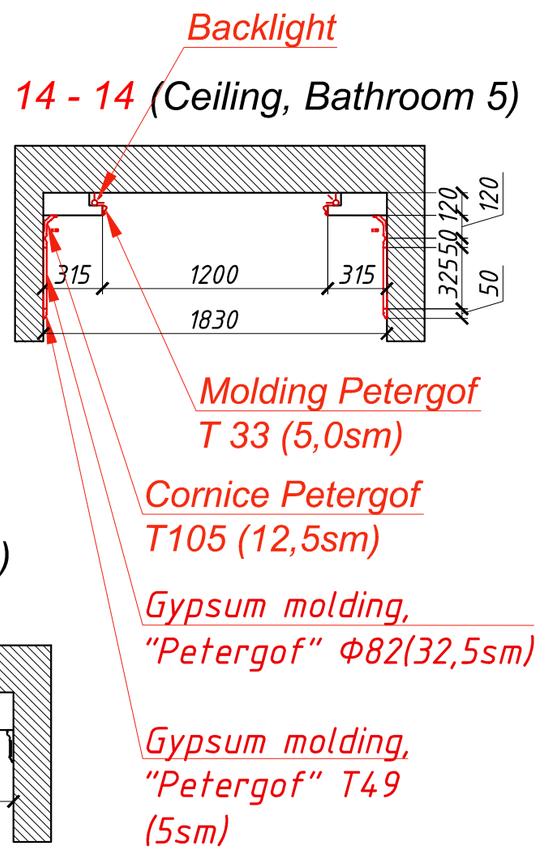

15 - 15 (Ceiling, Dressing room)

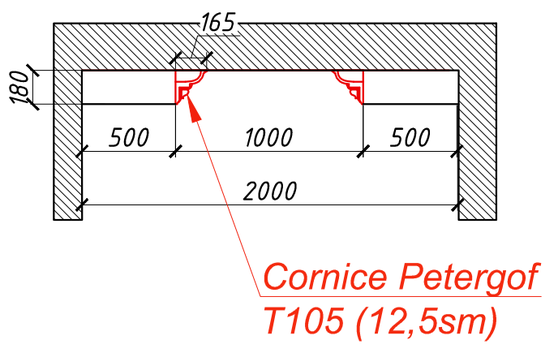

16 - 16 (Ceiling, bathroom2)

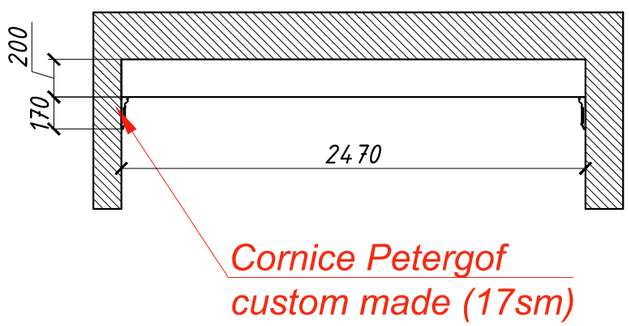

DP - 7.4
Ceiling section scheme

Note:

1. All dimentions clerify locally
2. Strengthen ceiling for gypsum decorative elements
3. Look together with DP-7

LUXURY ANTONOVICH DESIGN

Ceiling section scheme

Page DP-7.4

Design Project Abu Dhabi

ROYAL STYLE COMPUTER GRAPHIC DESIGN SERV
+971 45 513 144
2301 office, 23 fl, Tower 1
Boulevard Plaza, Dubai
www.antonovich-design.ae

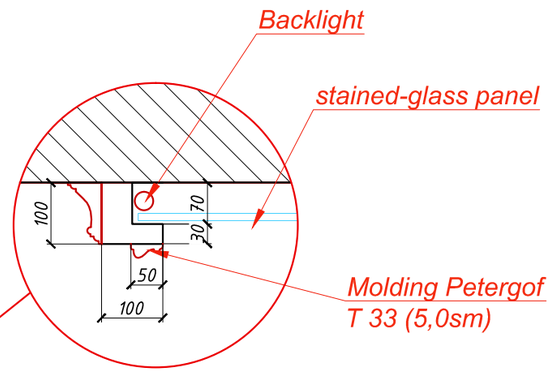

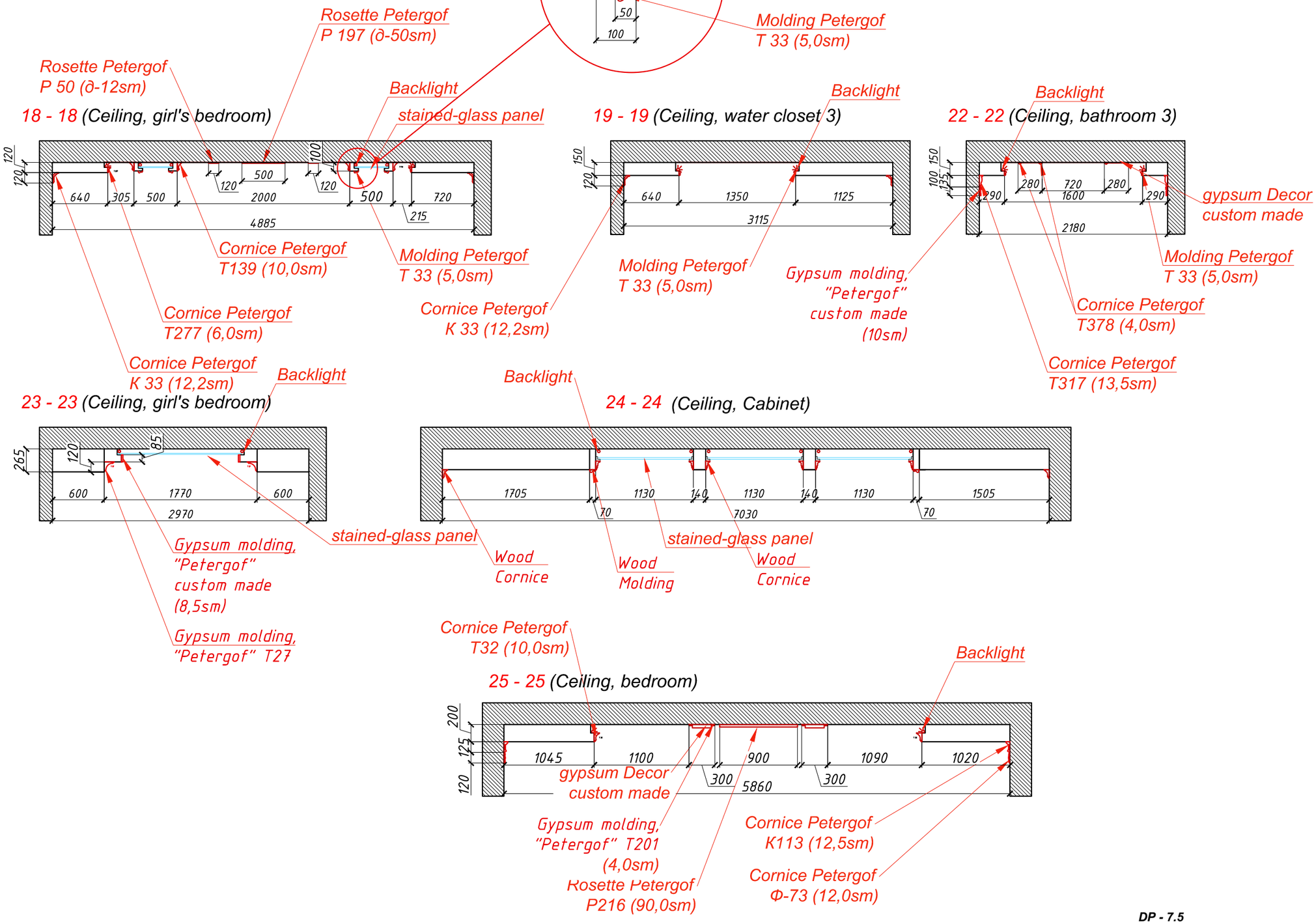

DP - 7.5
Ceiling section scheme

Note:

1. All dimentions clerify locally
2. Strengthen ceiling for gypsum decorative elements
3. Look together with DP-7

LUXURY ANTONOVICH DESIGN

Ceiling section scheme

Page DP-7.5

Design Project Abu Dhabi

ROYAL STYLE COMPUTER GRAPHIC DESIGN SERV
+971 45 513 144
2301 office, 23 fl, Tower 1
Boulevard Plaza, Dubai
www.antonovich-design.ae

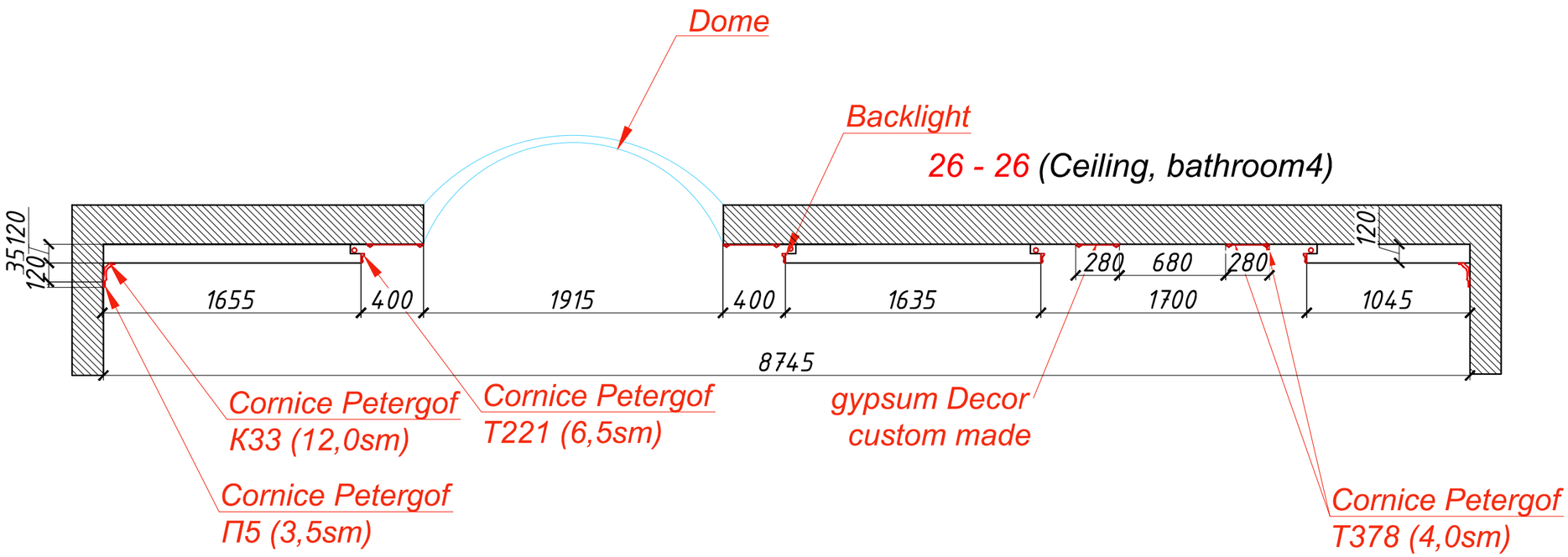

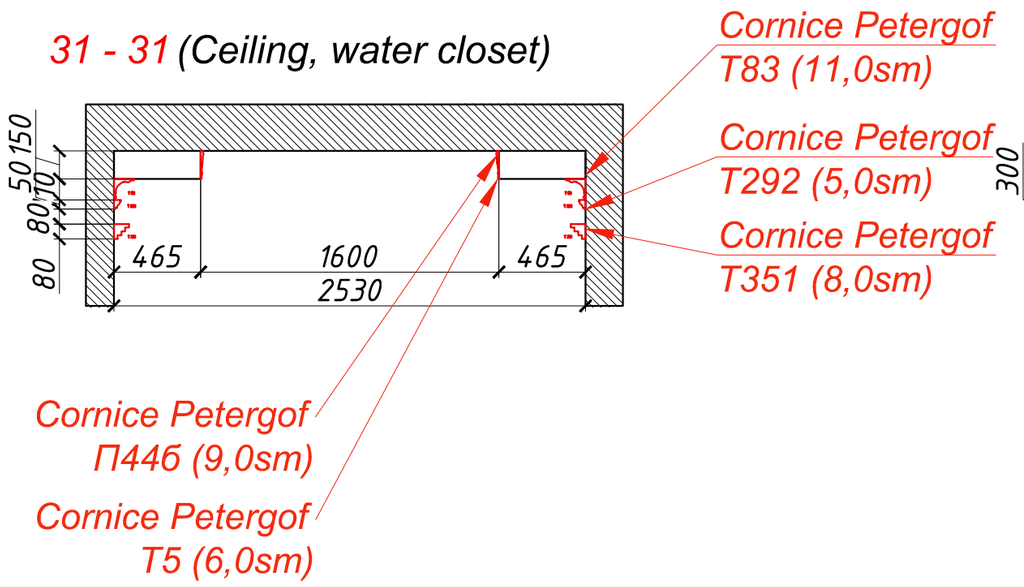

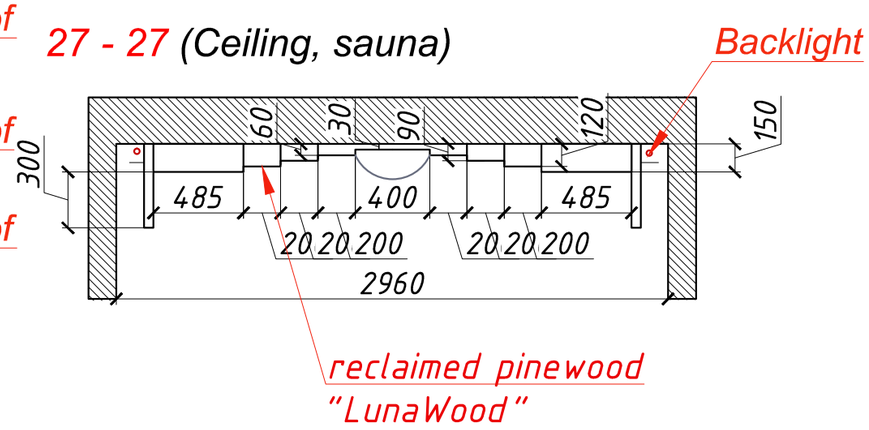

DP - 7.6
Ceiling section scheme

Note:

1. All dimentions clerify locally
2. Strengthen ceiling for gypsum decorative elements
3. Look together with DP-7

LUXURY ANTONOVICH DESIGN

Page DP-7.6

Ceiling section scheme

Design Project Abu Dhabi

ROYAL STYLE COMPUTER GRAPHIC DESIGN SERV
+971 45 513 144
2301 office, 23 fl, Tower 1
Boulevard Plaza, Dubai
www.antonovich-design.ae

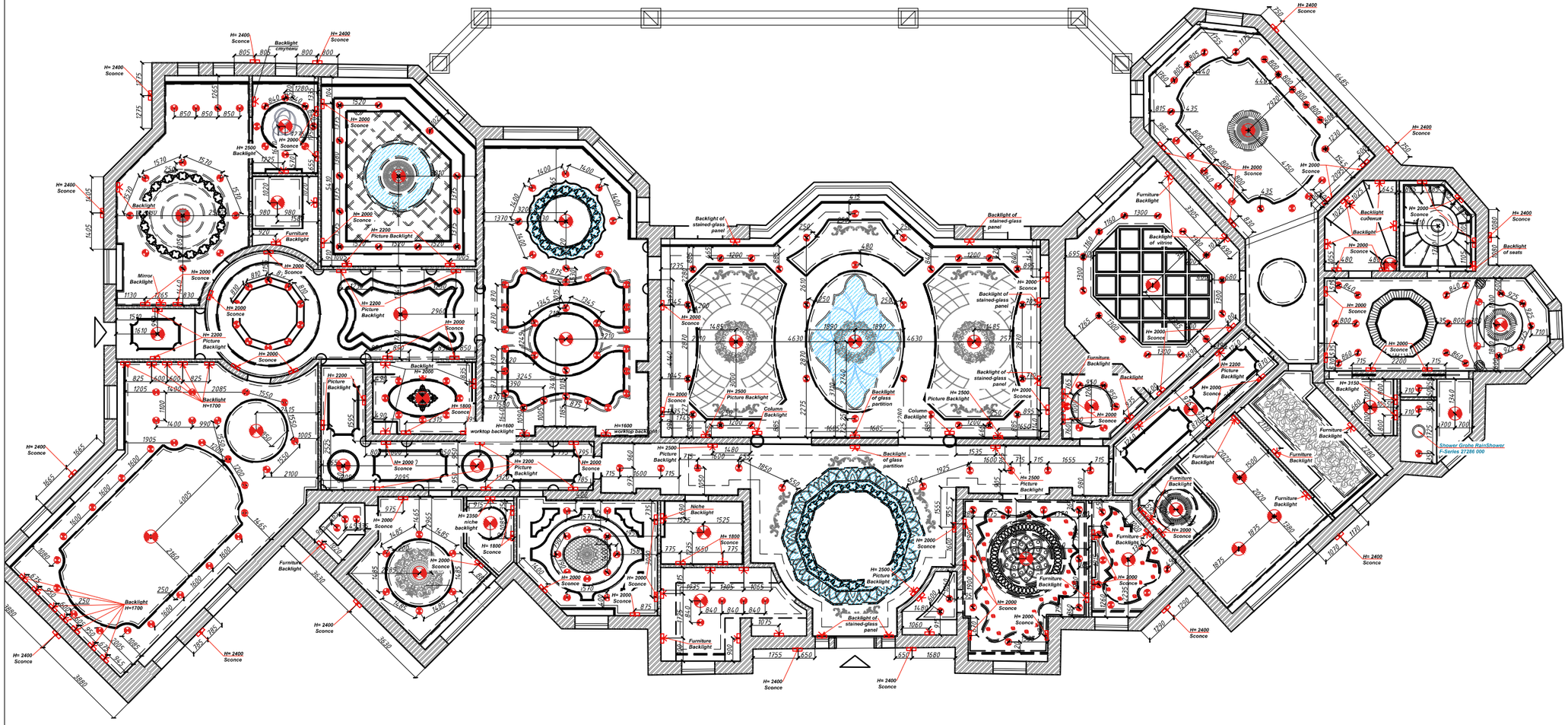

DP - 8
Lightning design scheme

LUXURY ANTONOVICH DESIGN

Page **DP-8**

Lightning design scheme

ROYAL STYLE COMPUTER GRAPHIC DESIGN SERV
+971 45 513 144
2301 office, 23 fl, Tower 1
Boulevard Plaza, Dubai
www.antonovich-design.ae

Design Project — Abu Dhabi

Conventional signs:
Backlight
Sconce
Spotlight
Ceiling light
LED strip light

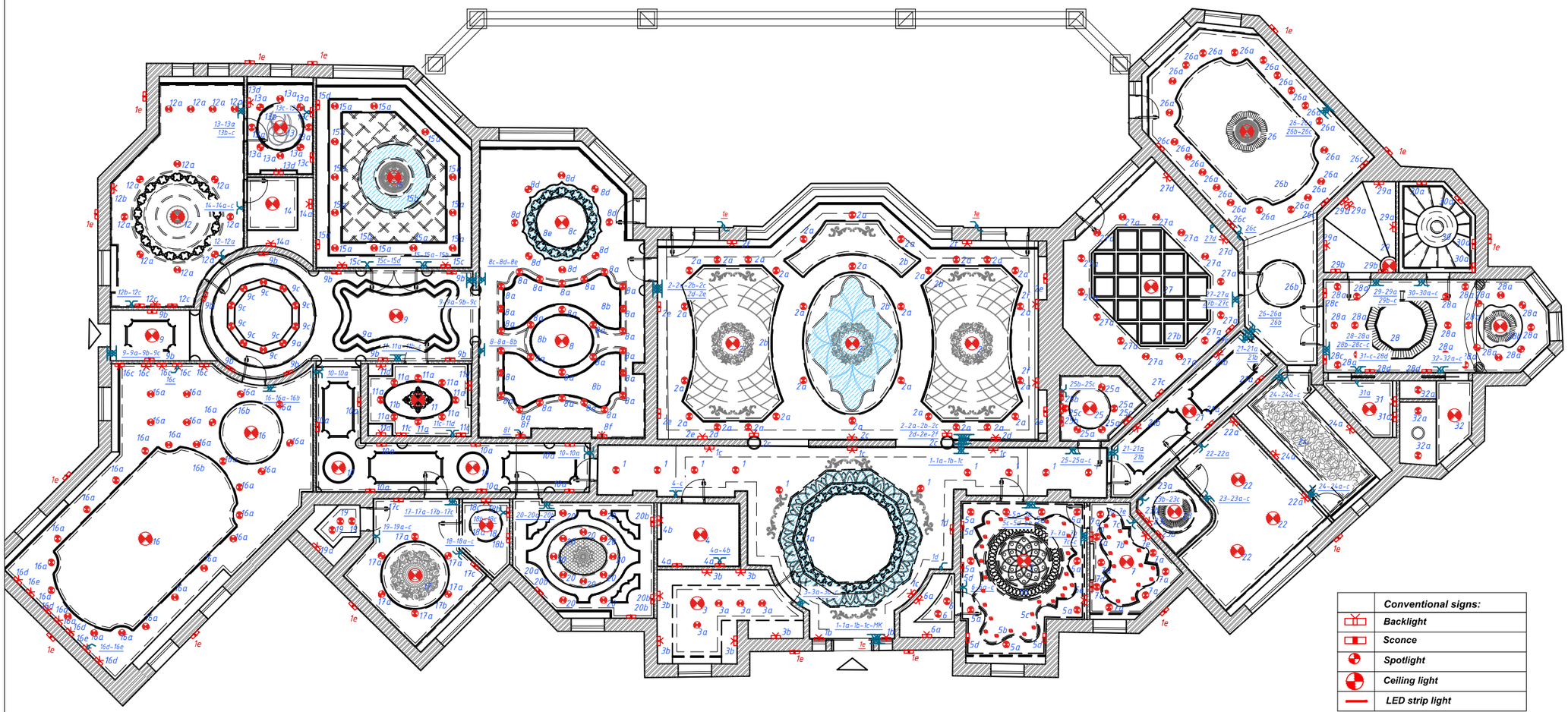

	Conventional signs:
	Backlight
	Sconce
	Spotlight
	Ceiling light
	LED strip light

DP - 9
Switches scheme

LUXURY ANTONOVICH DESIGN

Page **DP-9**

Switches scheme

ROYAL STYLE COMPUTER GRAPHIC DESIGN SERV
+971 45 513 144
2301 office, 23 fl, Tower 1
Boulevard Plaza, Dubai
www.antonovich-design.ae

Design Project — Abu Dhabi

Conventional signes

	Alternate switch (Single-button)
	Alternate switch (Twin-button)
	Single-button switch
	Twin-button switch

Note:

2. Mounting hight of switches h=900mm.
Space from doorway 150-200 mm.
3. Mounting dimensions look additionally on wall schemes.

GR.**1- Hall 1** alternate	**GR.7- Water closet 3**	**GR.13- Bathroom1**	**GR.19- Dressing room**	**GR.26- Bedroom.** alternate
GR1- spotlight GR1a- LED striplight GR1b- backlight of stained-glass panel GR1c- picture backlight GR1d- sconce GR1e- sconce outdoors	GR7 -ceiling light GR7a - spotlights GR7b -LED striplight GR7c -spotlights "sky with stars" GR7d - sconce GRV- ventilation switch	GR13 -ceiling light GR13a - spotlights GR13b - LED striplight GR13c - sconce GR13d - backlight	GR19-ceiling light GR19a -wardrobe backlight (motion sensor) GRV- ventilation switch	GR26 -ceiling light GR26a - spotlights GR26b - LED striplight GR26c - sconce
GR.**2- Living room** alternate	**GR.8- Kitchen**	**GR.14- Dressing room1**	**GR.20- Cinema-room**	
GR2- ceiling light GR2a- spotlights GR2b LED striplight GR2c- backlight GR2d- picture backlight GR2e-sconce GR2f-backlight of stained-glass panel	GR8 -ceiling light GR8a - spotlights GR8b -LED striplight GR8c -ceiling light GR8d - spotlights GR8e -LED striplight GR8f -worktop backlight	GR14-ceiling light GR14a -wardrobe backlight (motion sensor) GRV- ventilation switch	GR20 -ceiling light GR20a -LED striplight GR20b - sconce	**GR.27- Cabinet** GR27 -ceiling light GR27a - spotlights GR27b - backlight of stained-glass panel GR27c - sconce GR27d - furniture backlight
			GR.21- Hall3 alternate	
GR.**3- Dressing room1**	**GR.9- Hall2** alternate	**GR.15- Dressing room1**	GR21 -ceiling light GR21a - sconce GR21b - backlight	**GR.28- Bathroom**
GR3-ceiling light GR3a- spotlights GR3b-wardrobe backlight (motion sensor) GRV- ventilation switch	GR9 -ceiling light GR9a -LED striplight GR9b -sconce GR9c - spotlights	GR15 -ceiling light GR15a - spotlights GR15b -LED striplight GR15c - backlight GR15d - sconce	**GR.22- Boy's bedroom** GR22 -ceiling light GR22a - backlight	GR28 -LED striplight and backlight of stained-glass panel GR28a - spotlights GR28b - ceiling light GR28c - sconce GR28d - sconce GRV- ventilation switch
GR.**4- Water closet2**	alternate **GR.10- Hall2**	**GR.16- Playroom**	**GR.23- Bathroom 3**	**GR.29- Hammam**
GR4-ceiling light GR4a- sconce GR4b-niche backlight GRV- ventilation switch	GR10 -ceiling light GR10a - sconce	GR16 -ceiling light GR16a - spotlights GR16b -LED striplight GR16c -backlight GR16d -backlight GR16e -sconce	GR23 -ceiling light GR23a - LED striplight GR23b - sconce GR23c - furniture backlight GRV- ventilation switch	GR29 -ceiling light GR29a - backlight GR29b - sconce GRV- ventilation switch
GR.5- Girl's bedroom	**GR.11- Dressing room 3**	**GR.17- Guest bedroom 2**	**GR.24- Dressing room 4** alternate	**GR.30- Sauna**
GR5 -ceiling light GR5a - spotlights GR5b -LED striplight GR5c -spotlights "sky with stars" GR5d - sconce GR5e -backlight	GR11 -ceiling light GR11a - spotlights GR11b -LED striplight GR11c- sconce GR11d - niche backlight GRV- ventilation switch	GR17 -ceiling light GR17a - spotlights GR17b -LED striplight GR17c - sconce	GR24-backlight stained-glass panela GR24a -wardrobe backlight (motion sensor) GRV- ventilation switch	GR30 -ceiling light GR30a - sconce GRV- ventilation switch
				GR.31- Water closet
				GR31 -ceiling light GR31a - niche backlight GRV- ventilation switch
GR.6- Dressing room 3	**GR.12- Guest bedroom 1**	**GR.18- Bathroom 5**	**GR.25- Dressing room 4**	**GR.32- Shower room**
GR6- spotlights GR6a- backlight (motion sensor) GRV- ventilation switch	GR12 -ceiling light GR12a - spotlights GR12b -backlight GR12V - sconce	GR18 -ceiling light GR18a -LED striplight GR18b - sconce GR18c - niche backlight	GR25 -ceiling light GR25a - spotlights GR25b - sconce GR25c - backlight GRV- ventilation switch	GR32 -ceiling light GR32a - spotlights GRV- ventilation switch

DP - 9.1
Switches scheme (part 2)

LUXURY ANTONOVICH DESIGN

Page **DP-9**

DP - 9.1
Switches scheme (part 2)

ROYAL STYLE COMPUTER GRAPHIC DESIGN SERV
+971 45 513 144
2301 office, 23 fl, Tower 1
Boulevard Plaza, Dubai
www.antonovich-design.ae

Design Project: Abu Dhabi

Conventional signes:	
	Backlight
	Sconce
	Spotlight
	Ceiling light
	LED strip light
	Alternate switch (Single-button)
	Alternate switch (Twin-button)
	Single-button switch
	Twin-button switch

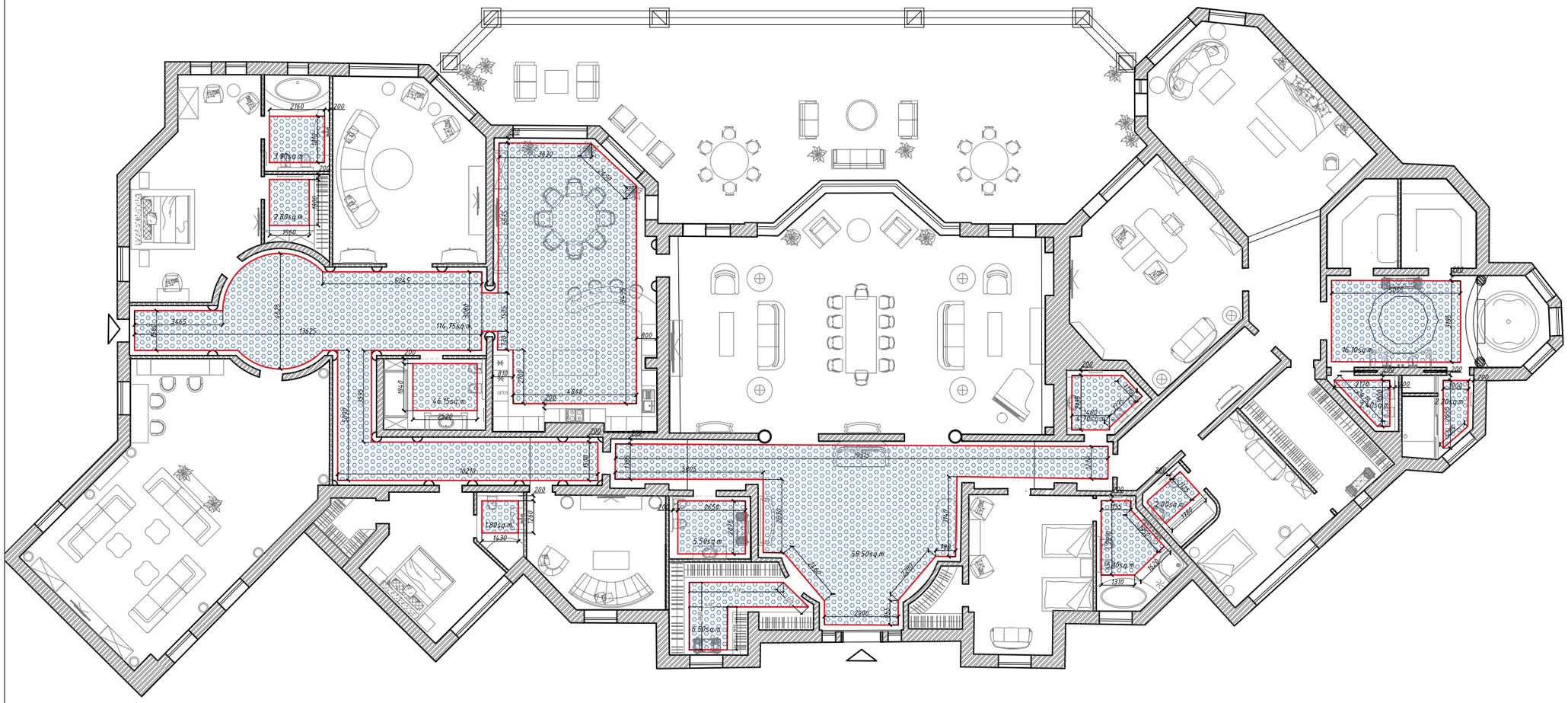

Conventions:

Water Heat-insulated floor

DP - 10
Heat-insulated floor scheme

LUXURY ANTONOVICH DESIGN

Page **DP-10**

Heat-insulated floor scheme

Design Project

Abu Dhabi

ROYAL STYLE COMPUTER GRAPHIC DESIGN SERV
+971 45 513 144
2301 office, 23 fl, Tower 1
Boulevard Plaza, Dubai
www.antonovich-design.ae

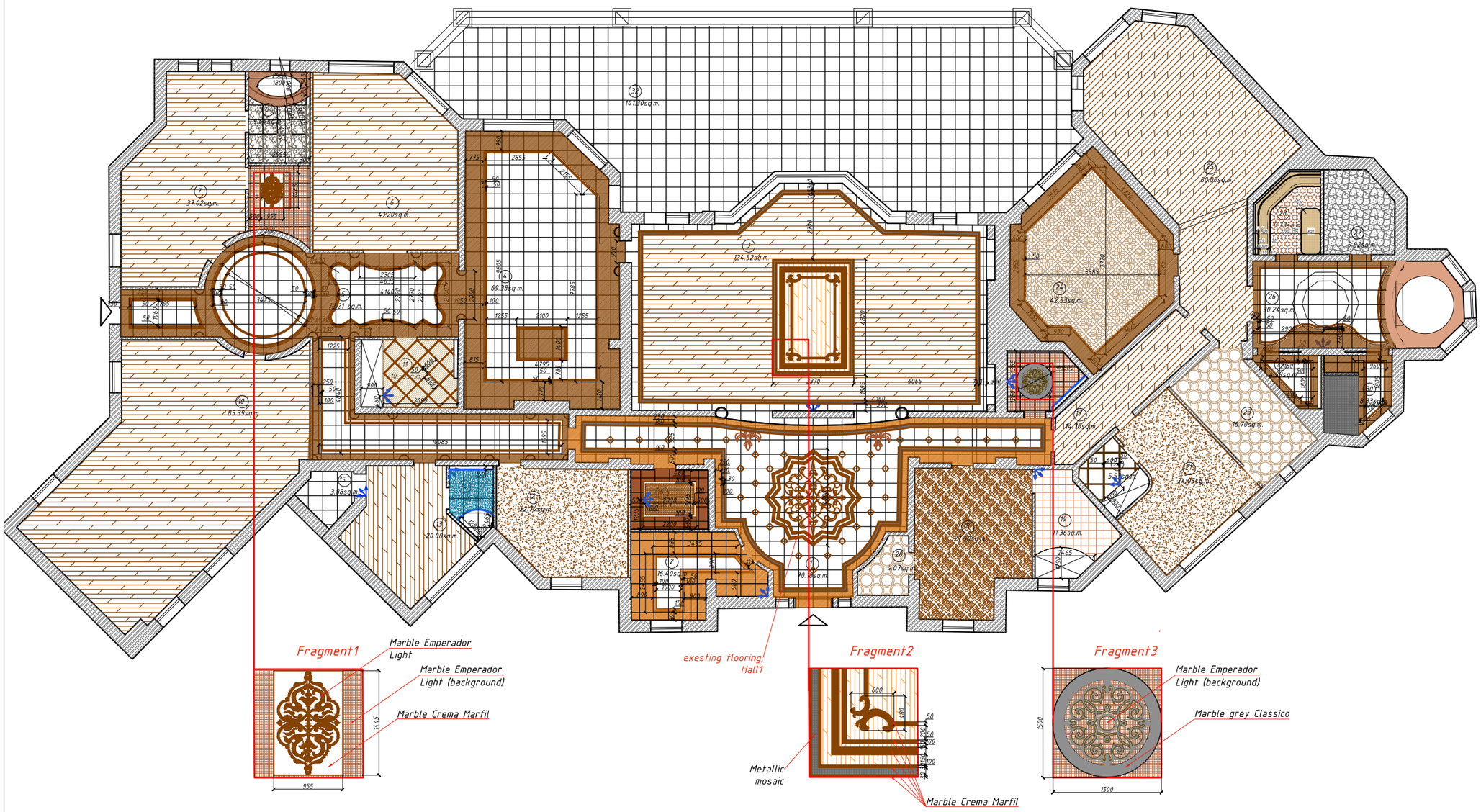

DP - 11
Flooring scheme

Примечание:

1. Amount of materials is calculated without trimming.
2. All dimentions sprcify locally.
3. Colors of parquet board according to visualisation

LUXURY ANTONOVICH DESIGN

Page **DP-11**

Flooring scheme

Design Project
Abu Dhabi

ROYAL STYLE COMPUTER GRAPHIC DESIGN SERV
+971 45 513 144
2301 office, 23 fl, Tower 1
Boulevard Plaza, Dubai
www.antonovich-design.ae

1 Hall 1
- Marble Emperador Light 60x60 16,40 sq.m.
- Metallic mosaic 5,00 sq.m.
- Marble Emperador Dark -3,00 sq.m.
- Existing flooring

2 Dressing room 1
- Marble Emperador Light 60x60 12,50 sq.m.
- Marble Crema Marfil 60x60 4,00 sq.m.

3 Living room
- Marble Emperador Dark 60x60 6,00 sq.m.
- parquet board "Admonter" Oak Dark - 85,35 sq.m.
- parquet board "Admonter" Дуб - 13,20 sq.m.
- Marble Crema Marfil 60x60 20,00 sq.m.

4 Kitchen
- Marble Emperador Dark 60x60 28,00 sq.m.
- Marble Crema Marfil 60x60 41,50 sq.m.

5 Hall 2
- Marble Emperador Dark 60x60 28,40 sq.m.
- Marble Crema Marfil 60x60 44,00 sq.m.

6 Rest room
- parquet board "Admonter" Oak Dark - 41,20sq.m.

7 Guest bedroom 1
- parquet board "Admonter" Oak Grey- 37,02sq.m.

8 Dressing room 2
- Marble Emperador Light 60x60 6,00 sq.m.
- Marble Crema Marfil 60x60 2,50 sq.m.

9 Bathroom 1
Petracer's Rinascimento Rame Acciaio Rame 60x60sm-6,37 sq.m.

10 Playroom
- parquet board "Admonter" Oak Dark -83,39 sq.m.

11 Water closet 1
- Marble Crema Marfil -7,05 sq.m.
- Marble Emperador Dark -1,43 sq.m.

12 Cinema-room
- carpet flooring - 22,74 sq.m.

13 Guest bedroom 2
- parquet board "Admonter" Oak Dark - 20,00 sq.m.

14 Bathroom 5
Marble Louise blue- 3,30 sq.m.
Marble Crema Marfil- 1,20 floor of Shower cabine

15 Dressing room
- Marble Creme de Turque 60x60sm -3,88 sq.m.

16 Bathroom 2
Onyx- 2,55 sq.m.
Marble Emperador Light - 4,68 sq.m.
Marble Crema Marfil - 0,73 sq.m.

17 Hall 3
- parquet board "Admonter" Oak Dark - 14,70 sq.m.

18 Girl's bedroom
- carpet flooring -27,50 sq.m.

19 Water closet 3
Floor tiles FAP Pura Rosa 30,5x30,5 sm- 10,00 sq.m.

20 Dressing room 3
- carpet flooring - 4,07 sq.m.

21 Boy's bedroom
- carpet flooring - 24,05 sq.m.

22 Bathroom 3
Marble Emperador Light - 0.60 sq.m.
Marble Crema Marfil - 3,60 sq.m.

23 Dressing room 4
- carpet flooring - 16,70 sq.m.

24 Cabinet
- parquetry-28,00 sq.m.
- Marble Emperador Dark 60x60 13,80 sq.m.
- Marble Crema Marfil 60x60 0,75 sq.m.

25 Bedroom
- parquet board "Admonter" Oak Dark -60,00 sq.m.

26 Bathroom 4
- Marble Emperador Dark 60x60 7,00 sq.m.
- Marble Crema Marfil 60x60 15,05 sq.m.
Marble Crema Extra - 5,55 sq.m.

27 Sauna
Genuine stone - 9,62 sq.m.

28 Hammam
mosaic Sicis Gold- 0,50 sq.m.
mosaic LOOK AT ME SICIS -Zinnia- 3,50 sq.m.
Petra Antiqua Col. Venice acqueforti classic collection-4,00 sq.m.

29 Water closet
- Marble Emperador Dark 60x60 2,00 sq.m.
- Marble Crema Marfil 60x60 2,30 sq.m.

30 Showers
- Marble Emperador Dark 60x60 1,60 sq.m.
- Marble Crema Marfil 60x60 2,10 sq.m.
Мозайка Sicis WATERGLASS - 3,50 sq.m.

31 Water closet
Marble Emperador Light - 6,00 sq.m.
Marble серый Classico - 0,80 sq.m.

DP - 11.1
Flooring specification

Примечание:

1. Amount of materials is calculated without trimming.
2. All dimentions sprcify locally.
3. Colors of parquet board according to visualisation

LUXURY ANTONOVICH DESIGN

Flooring specification

Page DP-11.1

Design Project Abu Dhabi

ROYAL STYLE COMPUTER GRAPHIC DESIGN SERV
+971 45 513 144
2301 office, 23 fl, Tower 1
Boulevard Plaza, Dubai
www.antonovich-design.ae

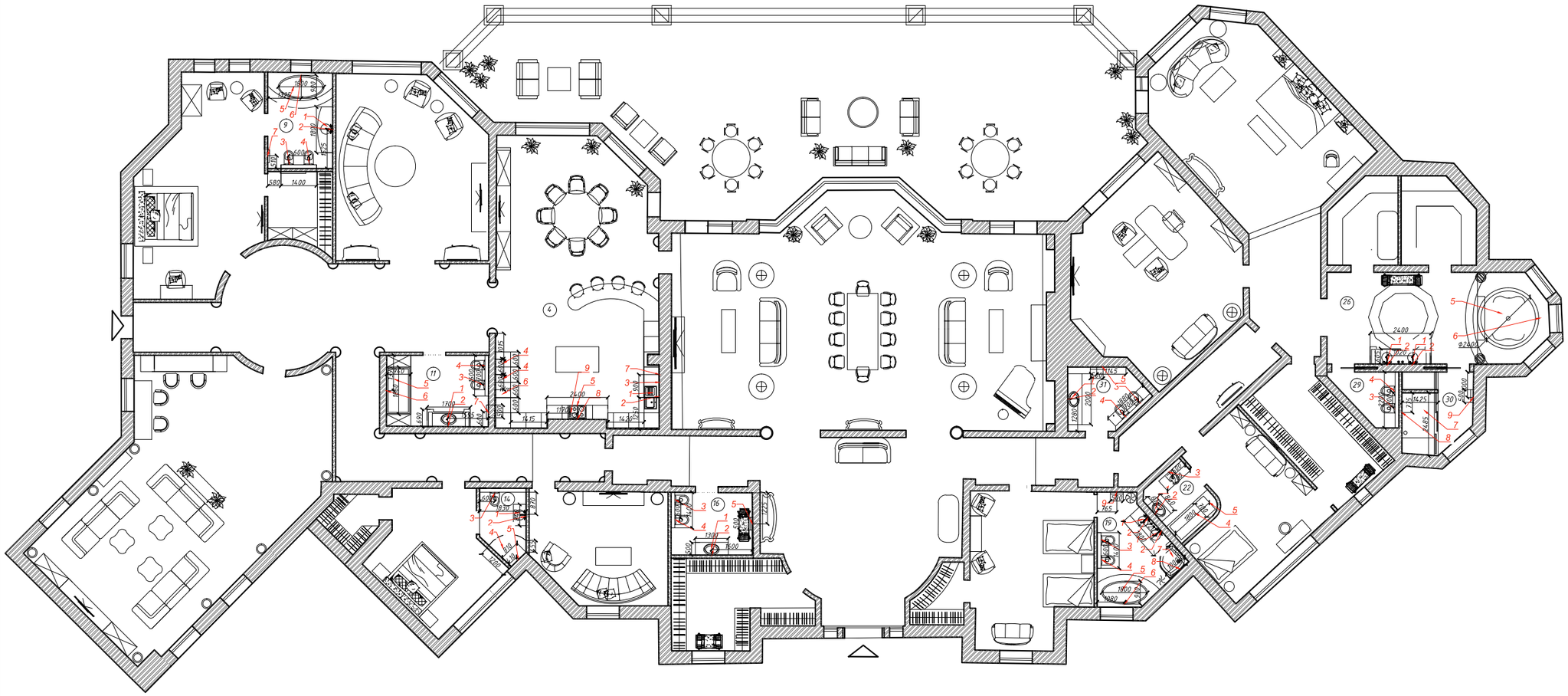

4. Equipment in the kitchen		
1	Kitchen-sink	1pt.
2	Tap	1pt.
3	Chopper, filter	1pt.
4	Fridge	1pt.
5	Oven	1pt.
6	Microwave Oven	1pt.
7	Dishwasher	1pt.
8	Kitchen hood	1pt.
9	Cooking top	1pt.

9. Equipment in the bathroom 1		
1	Washbasin	1pt.
2	Tap for washbasin	1pt.
3	Toilet	1pt.
4	Bidet	1pt.
5	Bath	1pt.
6	Tap for bath	1pt.
7	Heated towel rail	1pt.

11. Equipment in the water closet 1		
1	Washbasin	1pt.
2	Tap for washbasin	1pt.
3	Toilet	1pt.
4	Bidet	1pt.
5	Bath	1pt.
6	Tap for bath	1pt.
7	Heated towel rail	1pt.

14. Equipment in the bathroom5		
1	Washbasin	1pt.
2	Tap for washbasin	1pt.
3	Toilet	1pt.
4	Shower cabine	1pt.
5	Tap for Shower cabine	1pt.

16. Equipment in the bathroom2		
1	Washbasin	1pt.
2	Tap for washbasin	1pt.
3	Toilet	1pt.
4	Bidet	1pt.
5	Heated towel rail	1pt.

19. Equipment in the water closet 3		
1	Washbasin	1pt.
2	Tap for washbasin	1pt.
3	Toilet	1pt.
4	Bidet	1pt.
5	Bath	1pt.
6	Tap for bath	1pt.
7	Shower cabine	1pt.
8	Tap for Shower cabine	1pt.
9	Heated towel rail	1pt.

22. Equipment in the bathroom3		
1	Washbasin	1pt.
2	Tap for washbasin	1pt.
3	Toilet	1pt.
4	Shower cabine	1pt.
5	Tap for Shower cabine	1pt.

31. Equipment in the bathroom2		
1	Washbasin	1pt.
2	Tap for washbasin	1pt.
3	Toilet	1pt.
4	Bidet	1pt.
5	Heated towel rail	1pt.

26. Equipment in the bathroom 4 29. Water closet, 30. Shower rooms		
1	Washbasin	1pt.
2	Tap for washbasin	1pt.
3	Toilet	1pt.
4	Bidet	1pt.
5	Bath	1pt.
6	Tap for bath	1pt.
7	Shower cabine	1pt.
8	Tap for Shower cabine	1pt.
9	Heated towel rail	1pt.

DP - 12
Sanitary equipment and kitchen equipment scheme

LUXURY ANTONOVICH DESIGN

Page **DP-12**

Sanitary equipment and kitchen equipment scheme

Design Project

Abu Dhabi

ROYAL STYLE COMPUTER GRAPHIC DESIGN SERV
+971 45 513 144
2301 office, 23 fl, Tower 1
Boulevard Plaza, Dubai
www.antonovich-design.ae

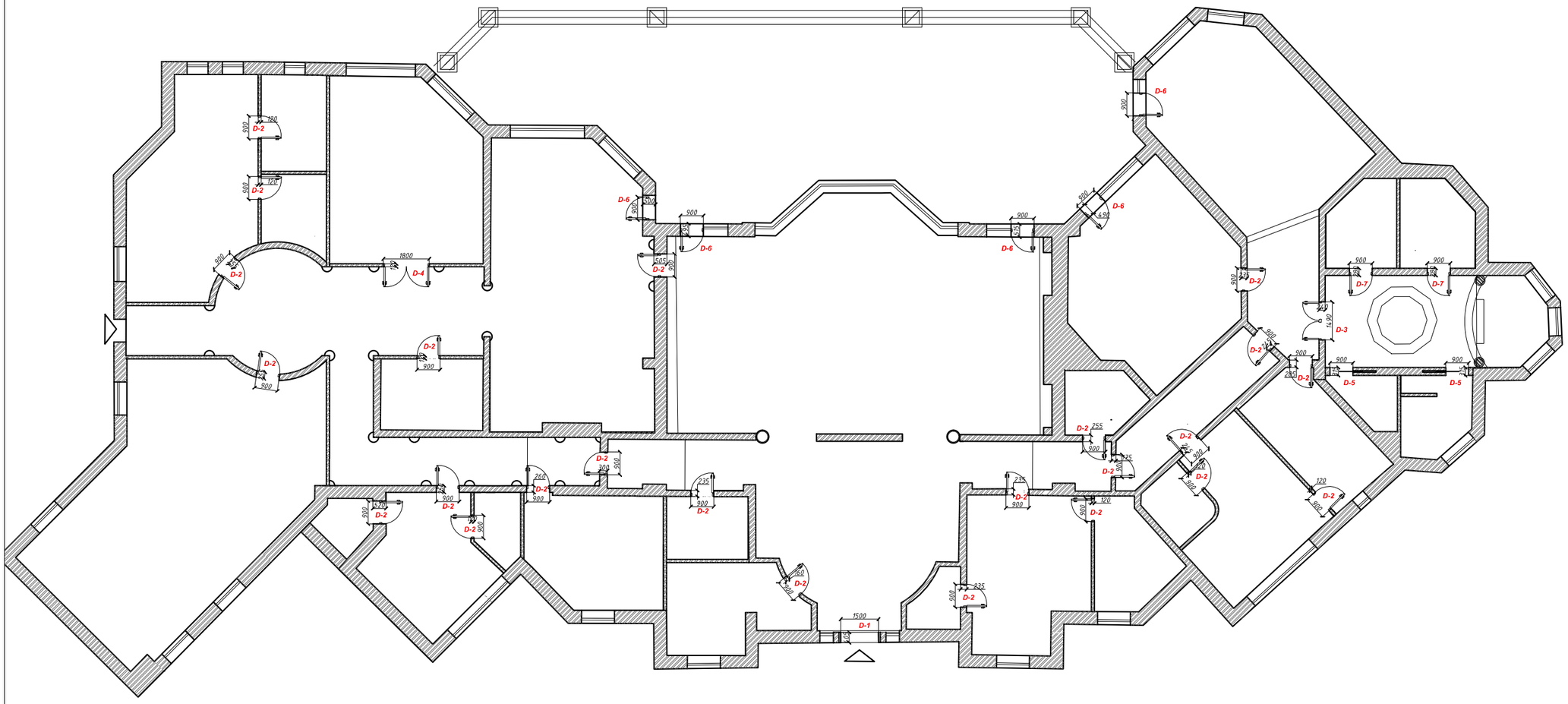

DP - 13
Door scheme

LUXURY ANTONOVICH DESIGN

Page DP-13

Door scheme

ROYAL STYLE COMPUTER GRAPHIC DESIGN SERV
+971 45 513 144
2301 office, 23 fl, Tower 1
Boulevard Plaza, Dubai
www.antonovich-design.ae

Design Project Abu Dhabi

Doorway filling specification

#.	Name	Doorway dim. ,mm	Amo-unt
D 1	Swing door (entrance)	1500* 2500 (H)	1 pt
D 2	Swing door	900* 2500 (H)	24 pt
D 3	Swing door	1490* 2500 (H)	1 pt
D 4	Swing door	1800* 2500 (H)	1 pt
D 5	Rolling doors	900* 2500 (H)	2 pt
D 6	Swing door (double)	1800* 2500 (H)	5 pt
D 7	Swing door (glass)	900* 2500 (H)	2 pt

Note:

1. Define door dimentions before order.
2. Door trims provide 120mm width.
3. Top doorway mark specified torward finished floor elevation. Type of material for door panel and door-frame clarify according to the technical card

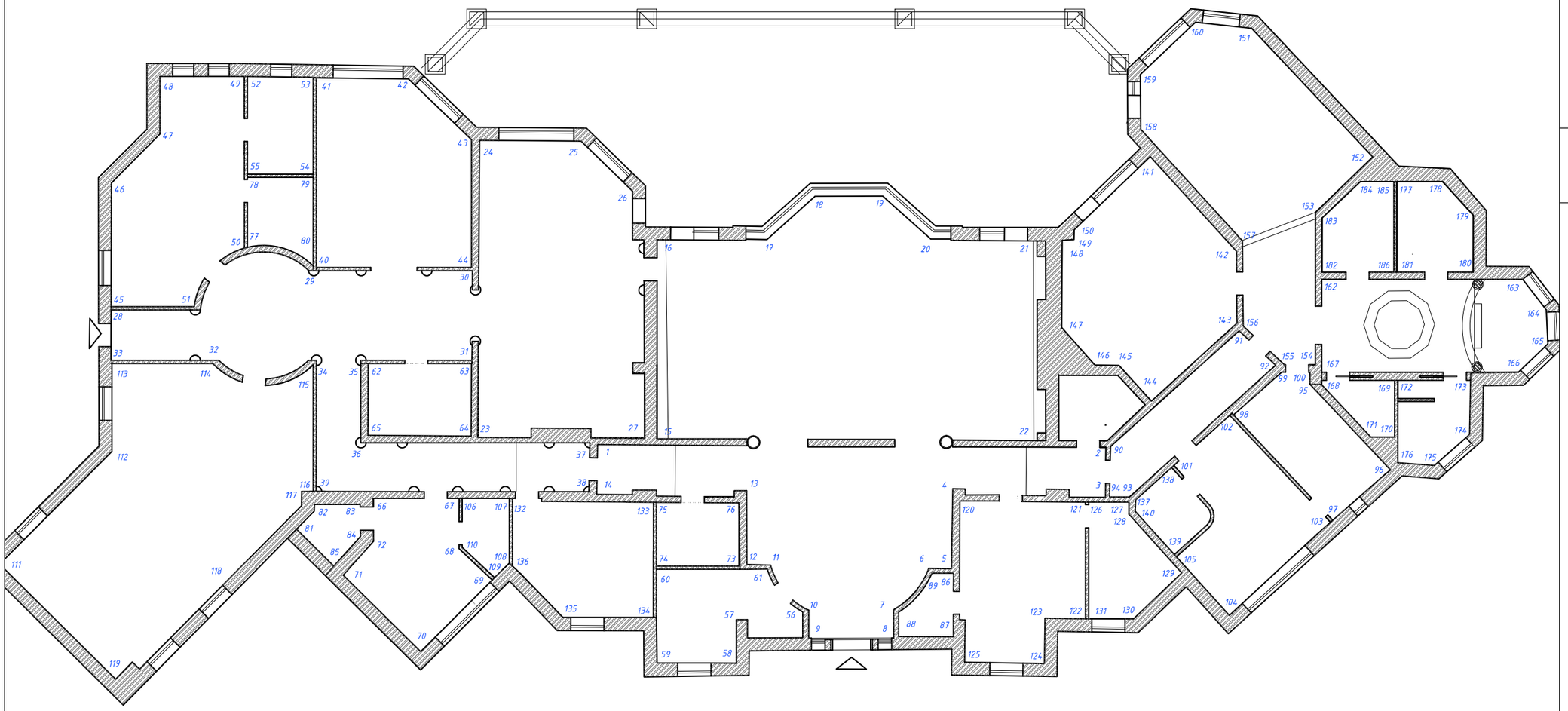

DP -13.1
Wall Denomination scheme

LUXURY ANTONOVICH DESIGN

Page **DP-13.1**

Wall Denomination scheme

Design Project

Abu Dhabi

ROYAL STYLE COMPUTER GRAPHIC DESIGN SERV
+971 45 513 144
2301 office, 23 fl, Tower 1
Boulevard Plaza, Dubai
www.antonovich-design.ae

Name of the room	№	Section scheme	Material	Amount,l.m.
Hall1 (room№1)	1	365 / 405	Cornice gypsum, custom made along the perimeter	amount look wall schemes
	2	145 / 45	Gypsum molding, "Petergof" П57 along the perimeter	amount look wall schemes
	3	125 / 65	Gypsum molding, "Petergof" T 361 along the perimeter	amount look wall schemes
	4	175	Molding Petergof custom made	17,20 l.m.
	5	50	Molding Petergof T 33	34,00 l.m.
	6	885	Decor Petergof custom made	8pt
	7	575 / 310	Decor Petergof custom made	20pt
Dressing room1(№2)	1	200	gypsum Cornice, "Petergof" custom made along the perimeter	amount look wall schemes
Living room (room№3)	1	365 / 405	Cornice gypsum, custom made along the perimeter	amount look wall schemes
	2	145 / 45	Gypsum molding, "Petergof" П57 along the perimeter	amount look wall schemes
	3	125 / 65	Gypsum molding, "Petergof" T 361 along the perimeter	amount look wall schemes
	4	125	Cornice Petergof T105	52,50 l.m.
	5	100	Cornice Petergof T32	14,40 l.m.
	6	50	Molding Petergof T 33	14,00 l.m.
	7	885	Decor Petergof custom made	10pt
	8	1640	Decor Petergof custom made	3pt
	9	14	Molding Petergof T 179	75,20 l.m.
Kitchen (room№4)	1	165	Gypsum molding, "Petergof" K73 along the perimeter	amount look wall schemes
	2	90	Gypsum molding, "Petergof" P 44b along the perimeter	amount look wall schemes
	3	60	Gypsum molding, "Petergof" T5 along the perimeter	amount look wall schemes
	4	125	Cornice Petergof T105	38,50 l.m.
	6	50	Molding Petergof T 33	25,00 l.m.
	7	580 / 310	Decor Petergof custom made	13pt
Hall2 (room№5)	1	90	Gypsum molding, "Petergof" P 44b along the perimeter	amount look wall schemes
	2	60	Gypsum molding, "Petergof" T5 along the perimeter	amount look wall schemes
	3	50	Molding Petergof T 33	36,00 l.m.
	4	250	Decor gypsum, custom made	16 pt
	5		Gypsum molding, custom made	40,50 l.m.
Rest room (room№6)	1	85	Cornice Petergof T32 along the perimeter	amount look wall schemes
	2	390	Gypsum molding, "Petergof" P 44b along the perimeter	amount look wall schemes
	3	1200	Rosette Petergof P 100	1 pt
	4	60	Cornice Petergof T 277	37,70 l.m.
	5	100	Cornice Petergof T 172	10,35 l.m.
	6	50	Molding Petergof T 33	10,35 l.m.
	7	50	Molding Petergof T 49	80,00 l.m.

Name of the room	№	Section scheme	Material	Amount,l.m.
Guest bedroom1 (room№7)	1	120	Gypsum molding, "Petergof" K33 along the perimeter	amount look wall schemes
	2	800	Rosette Petergof P 184	1pt
	3	50	Molding Petergof T 33	23,00 l.m.
	4	575 / 310	Decor Petergof custom made	17pt
Dressing room2(№8)	1	175 / 110	Gypsum molding, "Petergof" T24 along the perimeter	amount look wall schemes
Bathroom1(№9)	1	120	Gypsum molding, "Petergof" T258 along the perimeter	amount look wall schemes
	2	1200 / 1420	Decor Petergof custom made	1pt
	3	30 / 100	Gypsum molding, custom made	6,00 l.m.
Playroom(№10)	1	120	Gypsum molding, "Petergof" K33 along the perimeter	amount look wall schemes
	2	130	Gypsum molding, "Petergof" Ф132 along the perimeter	amount look wall schemes
	3	125	Cornice Petergof T105	26,00 l.m.
Water closet1(№11)	1	135	gypsum Cornice "Petergof" T317 along the perimeter	amount look wall schemes
	2	100	Gypsum molding, "Petergof" T37 along the perimeter	amount look wall schemes
	3	100	Gypsum molding, "Petergof" T37	6,30 l.m.
	4	1200	гипсовая Rosette, "Petergof" P9	1pt
Cinema-room (№12)	1	180 / 165	Gypsum molding, "Petergof" T136 along the perimeter	amount look wall schemes
	2	125	Cornice Petergof T105	29,00 l.m.
	3	50	Molding Petergof T 33	5,00 l.m.
Guest bedroom 2(№13)	1	115 / 18°	Gypsum molding, "Petergof" T27 along the perimeter	amount look wall schemes
	2	1900	гипсовая Rosette, "Petergof" custom made	1pt
	3	125	Cornice Petergof T105	8,10 l.m.
Bathroom 5(№14)	1	120	Gypsum molding, "Petergof" K33 along the perimeter	amount look wall schemes
	2	325	Gypsum molding, "Petergof" Ф82 along the perimeter	amount look wall schemes
	3	50	Gypsum molding, "Petergof" T49 along the perimeter	amount look wall schemes
	4	50	Molding Petergof T 33	3,70 l.m.
Dressing room(№15)	1	180 / 165	Gypsum molding, "Petergof" T136 along the perimeter	amount look wall schemes
Bathroom.2(№16)	1	170	gypsum Cornice "Petergof" custom made along the perimeter	amount look wall schemes
Hall3(№17)	1	90	Gypsum molding, "Petergof" P 44b along the perimeter	amount look wall schemes
	2	60	Gypsum molding, "Petergof" T5 along the perimeter	amount look wall schemes
	3	50	Molding Petergof T 33	14,50 l.m.
	4	250	Decor gypsum, custom made	8 pt
Girl's bedroom(№18)	1	120	Gypsum molding, "Petergof" K33	amount look wall schemes
	2	100	Cornice Petergof T139	15,00 l.m.
	3	50	Molding Petergof T 33	20,00 l.m.
	4	400	Rosette Petergof P 197	1 pt

Name of the room	№	Section scheme	Material	Amount,l.m.
	5	120	Rosette Petergof P 50	20pt
	6	60	Cornice Petergof T 277	17,25 l.m.
Water closet 3(№19)	1	120	Gypsum molding, "Petergof" K33 along the perimeter	amount look wall schemes
	2	50	Molding Petergof T 33	10,00 l.m.
Dressing room3(№20)	1	200 / 130	Gypsum molding, "Petergof" custom made along the perimeter	amount look wall schemes
Boy's bedroom(№21)	1	135	гипсовый Cornice, "Petergof" K1 along the perimeter	amount look wall schemes
	2	70	Gypsum molding, "Petergof" K99 along the perimeter	amount look wall schemes
Bathroom3(№22)	1	135	gypsum Cornice "Petergof" T317 along the perimeter	amount look wall schemes
	2	100	gypsum Cornice "Petergof" custom made along the perimeter	amount look wall schemes
	3	50	Molding Petergof T 33	5,00 l.m.
	4	40	Cornice Petergof T378	6,50 l.m.
	5	R=0,00 / R=0,40 / 200	gypsum Decor, custom made	4pt
Dressing room4(№23)	1	115 / 18°	Gypsum molding, "Petergof" T27 along the perimeter	amount look wall schemes
	2	85	Molding Petergof custom made	12,60 l.m.
Bedroom. (№25)	1	125	гипсовый Cornice, "Petergof" K113 along the perimeter	amount look wall schemes
	2	120	Gypsum molding, "Petergof" Ф-73 along the perimeter	amount look wall schemes
	3	100	Cornice Petergof T32	22,60 l.m.
	4	900	Rosette Petergof P216	1pt
	5	R=60 / R=25 / 250	gypsum Decor, custom made	4pt
	6	40	Gypsum molding, "Petergof" T201	8,00 l.m.
Bathroom 4(№26)	1	120	Gypsum molding, "Petergof" K33 along the perimeter	amount look wall schemes
	2	75	Gypsum molding, "Petergof" P5 along the perimeter	amount look wall schemes
	3	65	Gypsum molding, "Petergof" T221	13,70 l.m.
	4	40	Cornice Petergof T378	20,50 l.m.
	5	R=0,40 / R=0,25 / 250	gypsum Decor, custom made	4pt
	6	820 / 630 / 95	gypsum Decor, custom made	10pt
Water closet(№29) Shower room (№30)	1	120	Gypsum molding, "Petergof" K33 along the perimeter	amount look wall schemes
	2	75	Gypsum molding, "Petergof" P5 along the perimeter	amount look wall schemes
Water closet(№31)	1	110	Gypsum molding, "Petergof" T83 along the perimeter	amount look wall schemes
	2	50	Gypsum molding, "Petergof" T 292 along the perimeter	amount look wall schemes
	3	80	Gypsum molding, "Petergof" T 351 along the perimeter	amount look wall schemes
	4	90	Gypsum molding, "Petergof" P 44b	5,10 l.m.
	5	60	Gypsum molding, "Petergof" T5	5,10 l.m.

DP - 44
Ceiling gypsum specification

LUXURY ANTONOVICH DESIGN

Page **DP-44**

Ceiling gypsum specification

Design Project

Abu Dhabi

ROYAL STYLE COMPUTER GRAPHIC DESIGN SERV
+971 45 513 144
2301 office, 23 fl, Tower 1
Boulevard Plaza, Dubai
www.antonovich-design.ae

Room name	Furniture name	Dimensions, mm	Amount, pt	Notes
1. Hall1	Console	L.2000xW.550xH.920	1	Achymia by Jumbo Collection- Living Area 3018
	Pouf	L.1850xW.700xH.660	1	MANTELLASSI Shirley-1
	Sofa	L.2140xW.970xH.820	1	MANTELLASSI Wales
2. Dressing room1	Cupboard			custom made
	Pouf	L.1040xW.630xH.530	1	Pouf JUMBO COLLECTION SHE-78b
3. Living room	Sofa	L.2750xW.1050xH.1100	2	JUMBO COLLECTION REG-43SBC
	Armchair	L.1160xW.1050xH.1000	2	JUMBO COLLECTION REG-41SBC
	Rack	L.1330xW.1330xH.500	4	JUMBO COLLECTION REG-77
	Coffee table	L.1700xW.530xH.500	2	JUMBO COLLECTION REG-46
	Piano		1	
	Console	L.1450 W.450 H.850	2	Turri - Baroque
	Wall for TV	L.2220 W.510 H.2240	1	Vismara Baroque
	Armchair	L.620xW.680xH.1040	2	JUMBO COLLECTION HER-16b
	Table	L.900	1	
	Fireplace	L.2200 W.600 H.1600	1	custom made
	Table	L.3000xW.1200xH.780	1	JUMBO COLLECTION REG-14-2b
	Chairs	L.610xW.580xH.1180	10	TURRI TC142
	Rack for flowers	L.500	2	
4. Kitchen	Kitchen with island		1	ARCA Belle-1, custom made
	Bar chair	L.510xW.510xH.1000	4	Villa COSTANTINI PIETRO 9167B
	Table	L.2000xxH.780	1	BELCOR VE0154AX , custom made
	Chairs	L.540xW.620xH.1080	8	SCAPPINI SE 415_1
	Wall for TV with gl.case	L.4800xW.600xH.2700	1	ARCA Belle-1, custom made
6. Rest room	Sofa	L.4800xW.1100xH.1150	1	CEPPI 2937
	Armchair	L.850xW.900xH.1030	2	CEPPI 2906
	Coffee table	L.1600xH.480	1	CEPPI 2938
	Rack	L.530xH.680	2	GIACOMO ALTA CORTE TN130
	TV bollard	L.2600 W.480 H.650	1	Louis XV, Fac. Brogiato , custom made
	Console	L.1450 W.670 H.1050	2	Andrea Fanfani - Living Area 3018
7. Guest room	Bed	L.2350 W.2350 H.1260	1	Frou Frou brend Promemoria
	Night stands	L.630 W.380 H.670	2	SANTAROSSA VG021BL Sw
	Commode	L.1230xW.800xH.920	1	PIERMARIA MAISON COMO
	Armchair	L.630xW.800xH.1200	3	BRUNO ZAMPA Greta sedia
	Rack	L.600xH.700	1	FIDIA ELLEDUE AT 521
	Dressing table	L.1250xW.540xH.860	1	
8. Dressing room2	Cupboard			custom made
9. Bathroom1	Bath	L.1800xW.900	1	Villeroy & Boch Sentique
	Washbasin	L.1730 W.600 H.850	1	Epoque, series NOVARREDA
	Heated towel rail	L.500	1	Devon&devon Armonia 3
	Toilet		1	Lineatre Lady
	Bidet		1	Lineatre Lady
10. Playroom	Sofa	L.3300xW.1000xH.950	3	Sofa BRUNO ZAMPA Patrick , custom made
	Coffee table	L.800xH.800	3	
	Console	L.1450 W.670 H.1050	1	
	Aquarium	L.1600 W.200 H.3045	1	custom made
	Wall with work places	L.3400 W.700 H.2550	1	custom made
	Wall with work places	L.2300 W.700	1	custom made
	Wall with TV	L.5000 W.550 H.2550	1	custom made
	Chairs		4	
11. Water closet1	Bath	L.1800xW.900	1	Villeroy & Boch Sentique
	Washbasin	L.1700 W.750 H.850	1	Hatria Caroline
	Heated towel rail	L.500	1	Margaroli
	Toilet		1	Lineatre Lady
	Bidet		1	Lineatre Lady
12. Cinema-room	Sofa	L.2920xW.980xH.940	1	MANTELLASSI Blossom
	Armchair	L.1060xW.900xH.880	1	MANTELLASSI Louvre-4
	Wall for TV	L.2400xW.550	1	Vismara Baroque
	Coffee table	L.1400xW.700xH.270	1	MANTELLASSI Florindo-1

Room name	Furniture name	Dimensions, mm	Amount, pt	Notes
13. Guest bedroom2	Bed	L.2030 W.2020 H.1800	1	Volpi - Notte Emma 5004
	Night stands	L.600xW.310xH.710	2	Tea VOLPI 2640/W
14. Bathroom 5	Shower room		1	
	Washbasin	L.840 W.500 H.830	1	Collection CAPITONNE factory IL TEMPO DELpm. TD 2570
	Toilet		1	Lineatre Lady
15. Dressing room	Cupboard			custom made
16. Bathroom 2	Washbasin	L.1300 W.500 H.850	1	Evrolegno Narciso
	Heated towel rail	L.500	1	Devon&devon Armonia 3
	Toilet		1	Lineatre Lady
	Bidet		1	Lineatre Lady
17. Hall1	Console	L.1340 W.500 H.920	1	Volpi - Boemia 1145 - Living Area 3018
18. Women's bedroom	Bed	L.1300xW.2000xH.1850	2	SAMUELE CREAZIONI Art CR/692-I , custom made
	Night stand	L.670xW.400xH.600	1	Bertino CREAZIONI CR/3723
	Commode	L.1400xW.560xH.850	1	Berto CREAZIONI CR/726
	Armchair	L.800xW.800xH.1100	2	TIZZI CREAZIONI CR/3801
	Sofa	L.1630xW.780xH.1120	1	PIERMARIA MIKONOS DIVANO 2
19. Water closet3	Bath	L.1800xW.900	1	Villeroy & Boch Sentique
	Washbasin	L.1800 W.500 H.850	1	EUROLEGNO GLAMOUR
	Heated towel rail	L.500	1	Margaroli
	Toilet		1	
	Bidet		1	
	Shower room	L.1000xW.1000	1	
20. Dressing room	Cupboard			custom made
21. Men's bedroom	Bed	L.1300xW.2000	1	Visionaire
	Rack		4	
	Sofa	L.1800xW.850	1	Visionaire
	Glass case	L.800	1	
	Work table	L.1800xW.600	1	Visionaire
	Chair		1	
22. Bathroom 3	Bath	L.1800xW.700	1	Villeroy & Boch Sentique
	Washbasin	L.840xW.500xH.830	1	Collection CAPITONNE factory IL TEMPO DELpm. TD 2570
	Toilet		1	Villeroy & Boch Sentique
23. Dressing room 4	Cupboard			custom made
24. Cabinet	Work table	L.2100xW.2000xH.780	1	FORMICHI ASC025+ASC026
	Armchair	L.870xW.850xH.1640	1	MANTELLASSI Allegra-1
	Chair	L.580xW.720xH.1130	2	CEPPI 2915
	Fireplace	L.1960xH.1600	1	custom made
	Sofa	L.2150xW.880xH.720	1	MANTELLASSI Chesterfield-1
	Rack	L.700xH.730	2	ANGELO CAPPELLINI 30123/7
25. Bedroom.	Bed	L.2600xW.2100xH.198	1	MANET JUMBO COLLECTION MAN-102
	Night stands	L.750xW.410xH.720	2	JUMBO COLLECTION MAN-05b
	Banquette	L.1660xW.520xH.480	1	JUMBO COLLECTION MAN-07
	Sofa	L.2900xW.1100xH.1450	1	MANET JUMBO COLLECTION MAN-93
	Rack	L.750xW.750xH.580	2	MANET JUMBO COLLECTION MAN-77b
	Coffee table		1	
	Commode with TV	L.2070xW.500xH.900	1	JUMBO COLLECTION MAN-11
	Dressing table	L.1500xW.500xH.800	1	MANET JUMBO COLLECTION MAN-03
	Armchair	L.650xW.600xH.950	1	JUMBO COLLECTION MAN-06
26,29,30 Bathroom	Bath	L.2400	1	Villeroy & Boch Sentique
	Washbasin	L.2400 W.600 H.1000	1	Hatria Caroline
	Heated towel rail	L.500	1	Margaroli
	Toilet		1	Villeroy & Boch Sentique
	Bidet		1	Villeroy & Boch Sentique
	Shower room	L.2370 W.1425	1	custom made
31. Water closet	Washbasin	L.2000 W.560	1	
	Heated towel rail	L.500	1	Margaroli
	Toilet		1	Villeroy & Boch Sentique
	Bidet		1	Villeroy & Boch Sentique

DP - 46
Furniture specification

LUXURY ANTONOVICH DESIGN

Furniture specification

Page **DP-46**

Design Project: Abu Dhabi

ROYAL STYLE COMPUTER GRAPHIC DESIGN SERV
+971 45 513 144
2301 office, 23 fl, Tower 1
Boulevard Plaza, Dubai
www.antonovich-design.ae

Room name	Conventions	Characteristics/ appointment	Amount, pt	Notes
1. Hall1		Cornice backlight	43 rm	Eurolamp LED
		Spotlight	10	Masiero
		Picture backlight	3	Odeon Light 2530/2W
		Partition backlight	1	Eurolamp LED
		Stained-glass panel backlight	2	Eurolamp LED
		Sconce	1	CORNELIO CAPPELLINI 630/ACC L930xH1500
2. Dressing room1		Furniture backlight		With motion sensor
		Spotlight	4	Masiero
		Ceiling light (chandelier)	1	EMERGROUP 8120 H.1300xL.1000
3. Living room		Spotlight	29	Masiero
		Sconce	4	
		Table lamp	2	CALAMANDREI CHIANINI 1119/G H.600xL.500
		Picture backlight	2	Odeon Light 2530/2W
		Column backlight	2	Eurolamp LED
		Partition backlight	1	Eurolamp LED
		Stained-glass panel backlight	4	Eurolamp LED
		Cornice backlight	66 rm	Eurolamp LED
		Ceiling light (chandelier)	3	CORNELIO CAPPELLINI GEMMA.1300H.1050xL.1000
4. Kitchen		Spotlight	36	Masiero
		Ceiling light (chandelier)	2	DIALMA BROWN DB000910 H.930xL.850
		Cornice backlight	42 rm	Eurolamp LED
		Worktop backlight	2	Eurolamp LED
5. Hall2		Picture backlight	9	Odeon Light 2530/2W
		Spotlight	10	Masiero
		Sconce	8	RIVA A/10 H.420
		Ceiling light (chandelier)	4	VISIONNAIRE Thalita L.1100xH.1200
		Cornice backlight	43 rm	Eurolamp LED
6. Rest room		Cornice backlight	38 rm	Eurolamp LED
		Sconce	2	CHELINI 816 L.280xW.210xH.570
		Ceiling light (chandelier)	1	EMERGROUP 4029/16L.1250xH.770
		Picture backlight	2	Odeon Light 2530/2W
		Spotlight	12	Masiero
		Table lamp	2	CASPANI TINO E/164/7 L.760

Room name	Conventions	Characteristics/ appointment	Amount, pt	Notes
7. Guest room		Ceiling light (chandelier)	1	BITOSSI LUCIANO 2822+2824 L.1000xH.700
		Spotlight	12	Masiero
		Mirror backlight	1	Eurolamp LED
		Sconce	2	BITOSSI LUCIANO
		Plush backlight	1	Eurolamp LED
		Table lamp	2	FLORENCE COLLECTIONS 338 H.450xW.450xH.900
8. Dressing room2		Ceiling light (chandelier)	1	EMERGROUP 8035/6 L.580xH.600
		Furniture backlight		With motion sensor
9. Bathroom 1		Backlight	2	
		Ceiling light (chandelier)	1	Springtime CASPANI TINO PM/3850/2 L.800xH.900
		Spotlight	8	Masiero
		Sconce	2	
10. Playroom		Cornice backlight	30 rm	Eurolamp LED
		Spotlight	27	Masiero
		Ceiling light (chandelier)	2	
		Backlight	10	
		Sconce	2	
		Table lamp	2	
11. Water closet1		Backlight	3	
		Spotlight	8	Masiero
		Sconce	2	
		Ceiling light (chandelier)	1	
12. Cinema-room		Sconce	4	
		Cornice backlight		Eurolamp LED
		Spotlight	12	Masiero
13. Bedroom for guests 2		Ceiling light (chandelier)	1	PREGNO LP04 L.780xH.780
		Spotlight	6	Masiero
		Cornice backlight	9 rm	Eurolamp LED
		Sconce	2	CHELINI 816 L.280xW.210xH.570
		Table lamp	2	

DP -47
Lightning specification

LUXURY ANTONOVICH DESIGN

Page **DP-47**

Lightning specification

Design Project

Abu Dhabi

ROYAL STYLE COMPUTER GRAPHIC DESIGN SERV
+971 45 513 144
2301 office, 23 fl, Tower 1
Boulevard Plaza, Dubai
www.antonovich-design.ae

Room name	Conventions	Characteristics/ appointment	Amount, pt	Notes
14. Bathroom 5		Sconce	2	
		Niche backlight	1	
		Ceiling light (chandelier)	1	
		Cornice backlight	4 rm	Eurolamp LED
15. Dressing room		Spotlight	3	Masiero
		Furniture backlight		With motion sensor
16. Bathroom 2		Ceiling light (chandelier)	1	
		Sconce	2	
		Niche backlight		
17. Hall1		Ceiling light (chandelier)	1	VISIONNAIRE Thalita L.1100xH.1200
		Sconce	2	Masiero
		Picture backlight	2	Odeon Light 2530/2W
18. Women's bedroom		Ceiling light (chandelier)	1	ATMOSPHERA PF.CAP. LMS.02 L.750xH.600
		Spotlight	9	Masiero
		Integrated ceiling diode lamp	26	
		Sconce	4	
		Furniture backlight	1	
		Cornice backlight	34 rm	Eurolamp LED
		Table lamp	1	
19. Water closet3		Cornice backlight	11 rm	Eurolamp LED
		Sconce	2	EMERGROUP 3089/A2 L.340xW.220xH.340
		Ceiling light (chandelier)	1	Florian big GIUSTI PORTOS 504+P24 L.1840xH.700
		Spotlight	8	Masiero
		Integrated ceiling diode lamp	16	
		Furniture backlight	1	
20. Dressing room		Ceiling light (chandelier)	2	
		Furniture backlight		With motion sensor
21. Men's bedroom		Ceiling light (chandelier)	3	
		Furniture backlight	2	
22. Bathroom 3		Ceiling light (chandelier)	1	
		Sconce	2	
		Backlight	1	
		Cornice backlight	6 rm	

Room name	Conventions	Characteristics/ appointment	Amount, pt	Notes
23. Dressing room 4		Furniture backlight		With motion sensor
		Cornice backlight	13 rm	Eurolamp LED
24. Cabinet		Ceiling light (chandelier)	1	EMERGROUP 5660/12 L.1220xH.870
		Spotlight	14	Masiero
		Furniture backlight	2	
		Sconce	2	CHELINI 455 L.280xW.120xH.380
		Stained-glass panel backlight	61 rm	Eurolamp LED
		Table lamp	1	
25. Bedroom.		Sconce	4	EMERGROUP 8124 H.350xL.350
		Spotlight	20	Masiero
		Cornice backlight	18 rm	Eurolamp LED
		Ceiling light (chandelier)	1	Swarovski Brasline H.130 xL.75
26. Bathroom 4		Spotlight	19	Masiero
		Cornice backlight	7 rm	Eurolamp LED
		Ceiling light (chandelier)	1	SWAROVSKI, L.400xH.350 ELITE BOHEMIA
		Sconce	4	Pendant wall RM ARREDAMENTI L.360xW.220xH.320
27. Hutts		Sconce	2	
		Ceiling light (chandelier)	1	
		Backlight	4	
28. Sauna		Sconce	3	
		Cornice backlight	13 rm	Eurolamp LED
		Backlight	1	
		Ceiling light (chandelier)	1	Plafon / Celing lamp BLOW L.500xW.180
29. Water closet		Ceiling light (chandelier)	1	
		Backlight	2	
30. Shower room		Ceiling light (chandelier)	1	H 10108/60 Zonca H.220xL.600
		Spotlight	3	Masiero
31. Water closet		NIche backlight	1	
		Spotlight	6	Masiero
		Ceiling light (chandelier)	1	
		Sconce	2	
		Furniture backlight	1	

DP -47.1
Lightning specification

LUXURY ANTONOVICH DESIGN

Page **DP-47.1**

Lightning specification

Design Project

Abu Dhabi

ROYAL STYLE COMPUTER GRAPHIC DESIGN SERV
+971 45 513 144
2301 office, 23 fl, Tower 1
Boulevard Plaza, Dubai
www.antonovich-design.ae

Room name	Device name	Amount, pt	Notes
1. Kitchen-Living room	TV and other devices	1	
	Refrigerator	1	
	Oven	1	Miele
	Dishwasher	1	Miele
	Cooking top	1	
	Extracting hood	1	
	Filter	1	
	Chopper	1	
	Microwawe oven	1	Miele
2. Rest room	TV and other devices	1	
3. Guest bedroom 1	TV and other devices	1	
4. Playroom	TV and other devices	1	
5. Cinema-room	TV and other devices	1	
6. Cabinet	TV and other devices	1	

DP -48
Electrical equipment specification

LUXURY ANTONOVICH DESIGN

Page **DP-48**

Electrical equipment specification

Design Project

Abu Dhabi

ROYAL STYLE COMPUTER GRAPHIC DESIGN SERV
+971 45 513 144
2301 office, 23 fl, Tower 1
Boulevard Plaza, Dubai
www.antonovich-design.ae